Midea

EN

WASHING MACHINE

Front Loading

USER MANUAL

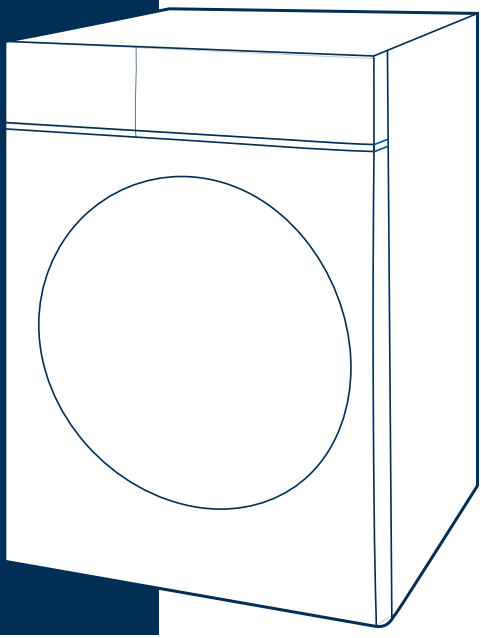

Read This Manual
Read all instructions and explanations for the installation before use. Follow the instructions carefully. Keep the operation instructions handy for later use. If the appliance is sold or passed on, ensure that the new owner always receives this operation instructions.

MODEL:
MF110W90BA10/W-UK

www.midea.com

THANK YOU LETTER

Thank you for choosing Midea! Before using your new Midea product, please read this manual thoroughly to ensure that you know how to operate the features and functions that your new appliance offers in a safe way.

CONTENTS

THANK YOU LETTER 01
SAFETY INSTRUCTIONS 02
SPECIFICATIONS 06
PRODUCT OVERVIEW 07
QUICK START GUIDE 08
PRODUCT INSTALLATION 11
OPERATION INSTRUCTIONS 15
CLEANING AND MAINTENANCE 28
TROUBLE SHOOTING 32
TRADEMARKS, COPYRIGHTS AND LEGAL STATEMENT 33
DISPOSAL AND RECYCLING 34
DATA PROTECTION NOTICE 35
WARRANTY CARD 36

Read all instructions and explanations before use.Follow the instructions carefully. Keep the operation instructions handy for later use. if the appliance is sold or passed on then ensure that the new owner always receives these operation instructions.

SAFETY INSTRUCTIONS

Intended Use

The product is intended only for home use and for textiles in household amounts suitable for washing. This appliance is for indoor use only and not intended for built in use. Only use according to these instructions. The appliance is not intended for commercial use.
Any other use is considered as improper use. The producer is not responsible for any damage or injury that may result from it.
This appliance is intended to be used in household and similar applications such as:
- Staff kitchen areas in shops, offices and other working environments;
- Farm houses;
- By clients in hotels, motels and other residential type environments;
- Bed and breakfast type environments;
- Areas for communal use in blocks of flats or in launderettes.

Explanation of Symbols

	DANGER This symbol indicates that there are dangers to the life and health of persons due to extremely flammable gas.
	WARNING OF ELECTRICAL VOLTAGE This symbol indicates that there is a danger to life and health of persons due to voltage.
	WARNING The signal word indicates a hazard with a medium level of risk which, if not avoided, may result in death or serious injury.
	CAUTION The signal word indicates a hazard with a low degree of risk which, if not avoided, may result in minor or moderate injury.
	NOTE The signal word indicates important information (e.g. damage to property), but not danger.
	OBSERVE INSTRUCTIONS This symbol indicates that a service technician should only operate and maintain this appliance in accordance with the operating instructions.

Please read the following safety information thoroughly and follow it strictly to minimize the risk of fire or explosion, electric shock and to prevent property damage, personal injury or loss of life. Failing to follow these instructions shall void any warranty.
This appliance is not intended for use by persons (including children) with reduced physical, sensory or mental capabilities, or lack of experience and knowledge, unless they have been given supervision or instruction concerning use of the appliance by a person responsible for their safety.

⚠ WARNING: Electric Shock Hazard

- If the supply cord is damaged, it must be replaced by the manufacturer, its service agent or similarly qualified persons in order to avoid a hazard.
- If the machine is damaged, it must not be operated unless repaired by the manufacturer, its service agent or similarly qualified persons.
- Risk of electric shock!
- The appliance can be used by children aged from 8 years and above and persons with reduced physical, sensory or mental capabilities or lack of experience and knowledge if they have been given supervision or instruction concerning use of the appliance in a safe way and understand the hazards involved. Children shall not play with the appliance. Cleaning and user maintenance shall not be made by children without supervision.
- Children should be supervised that they do not play with the appliance.
- Children of less than 3 years should be kept away unless continuously supervised.
- Animals and children may climb into the machine. Check the machine before every operation.
- Do not climb or sit on the appliance.

Installation Location and Surrounding

- All washing and additional substances are to be kept in a safe place out of the reach of children.
- Do not install the machine on a carpet floor.
- The obstruction of the openings by a carpet can damage the machine.
- Keep the appliance clear from heating sources and direct sunlight to avoid plastic and rubber parts to corrode.
- Do not use the appliance in humid environments or rooms containing explosive or caustic gas. In case of water leakage or water splashes, let the appliance dry in the open air.
- The appliance must not be installed behind a lockable door, a sliding door or a door with a hinge on the opposite side to that of the machine .
- Do not operate the machine in rooms with a temperature of below 5°C. This can cause damages to parts of it. If it is unavoidable, make sure to drain the water completely from the appliance after every use (see“Maintenance - Cleaning of drain pump filter”) to avoid damages caused by frost.
- Never use flammable sprays or substances in the immediate proximity of the appliance.

Installation

- Remove all packaging material and transport bolts before using the appliance. Otherwise, serious damage may result.
- This appliance is equipped with a single inlet valve and can be connected to the cold water supply only.
- Mains plug must be accessible after installation.
- Before washing clothes for the first time, the product shall be operated once throughout all the procedures without any clothes inside.
- Before using the machine, the product shall be calibrated.
- Do not put any excessively heavy objects on the appliance, like water containers or heating devices.

- The new hose-sets supplied with the appliance are to be used and that old hose-sets should not be reused.
- Max. Inlet water pressure 1 MPa. Min. inlet water pressure 0.05 MPa.

Electrical Connection

- Make sure the supply cable is not trapped by the machine, or it can get damaged.
- Connect the product to a grounded outlet protected by a fuse complying with the values in the "Technical specifications" table. The grounding installation has to be made by a qualified electrician. Ensure that the machine is installed in accordance with the local regulations.
- Water and electrical connections must be carried out by a qualified technician in accordance with the manufacturer's instructions and local safety regulations.

⚠ WARNING:

- Don´t use multiple plugs or extension cords.
- The appliance must not have an external switching device such as a timer or connected to a circuit that is regularly switched on and off.
- Do not pull the plug out of the mains outlet if there is flammable gas around.
- Never pull out power plug with wet hands.
- Always pull at the plug, not at the cable.
- Always unplug the appliance if it is not being used.

Water Connections

- Check the connections of the water inlet tubes, the water tap and the outlet hose for possible problems due to changes of water pressure. If the connections loosen or leak, close the water tap and get it repaired.
- Do not use the appliance before the pipes and hoses are installed properly by qualified persons.
- Glass door may become very hot during the operation. Keep children and pets far away from the machine while it is operating.
- The water inlet and outlet hoses have to be safely installed and remain undamaged.
- Otherwise, water leakage can occur.
- Do not remove the drain pump filter while there is still water in the appliance. Big quantities of water can leak out, and there is a risk of scalding due to hot water.

Operation and Maintenance

- Never use any flammable, explosive or toxic solvents. Do not use gasoline and alcohol etc. as detergents. Only select detergents that are suitable for machine washing.
- Make sure that all pockets are emptied. Sharp and rigid items such as coins, brooches, nails, screws, stones etc. may cause serious damages to this machine.
- Remove all objects from pockets such as lighters and matches before use the appliance. Thoroughly rinse items that have been washed by hand.

- Items that have been soiled with substances such as cooking oil, acetone, alcohol, petrol, kerosene, spot removers, turpentine, wax and wax removers should be washed in hot with an extra amount of detergent before being dried in the appliance.
- Items containing foam rubber (latex foam), shower caps, water proof textiles, rubber backed articles and clothes or pillows fitted with foam rubber pads should not be washed in the machine.
- Fabric softeners or similar products should be used are recommended in their instructions.
- Never try to open the door forcefully.
- The door will unlock shortly after the end of a cycle.
- Please do not close the door with excessive force. If it is found difficult to close the door, please check if the clothes are properly inserted and distributed.
- Always unplug the appliance and close the water tap before cleaning and maintenance and after each use.
- Never pour water over the appliance for cleaning purpose. Risk of electric shock!
- Repairs shall only be carried out by the manufacturer, its service agent or similarly qualified persons in order to avoid a hazard.
- The producer will not be responsible for damages caused by the intervention of not authorized persons.

Transport

- Before Transport:
  -Bolts shall be reinstalled to the machine by a specialized person;
  -Accumulated water shall be drained out of the machine.
- This appliance is heavy. Transport with care. Never hold any protruding part of the machine when lifting. The machine door can not be used as a handle.

Model	Washing Capacity
MF110W90BA10/W-UK	9.0kg

SPECIFICATIONS

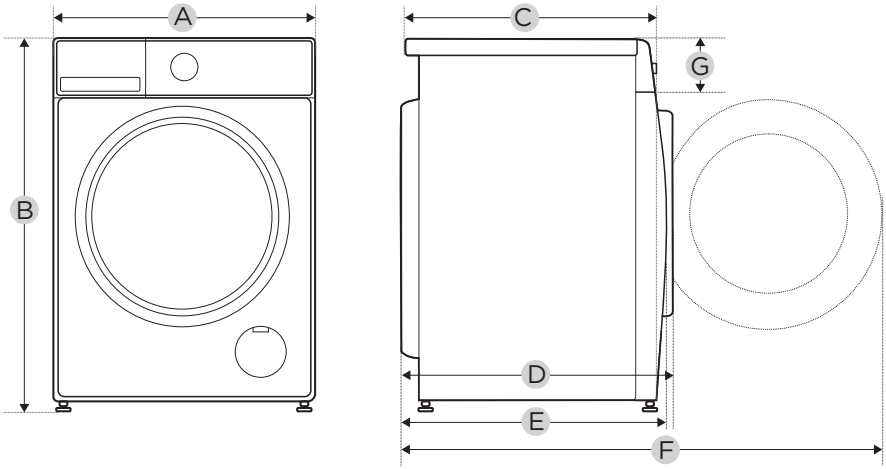

Model	MF110W90BA10/W-UK
Power Supply	220-240V~,50Hz
MAX. Current	10A
Standard Water Pressure	0.05MPa~1MPa
Washing Capacity	9.0kg
Dimension	
A	595mm
B	850mm
C	535mm
Weight	61kg
Rated Power	1950W
Reference Dimension	
D	595mm
E	565mm
F	1030mm
G	152mm

PRODUCT OVERVIEW

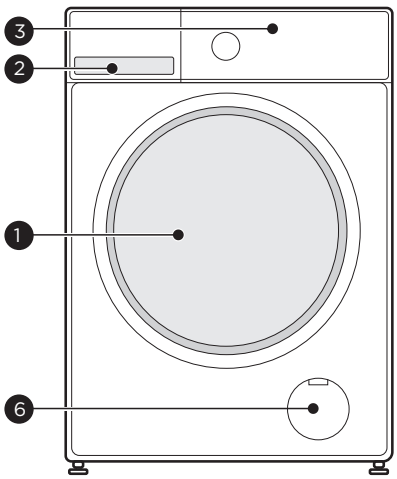

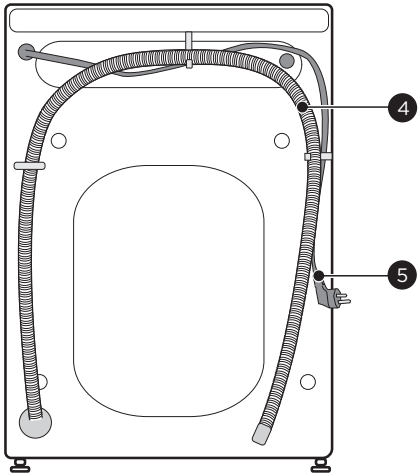

1	Door	4	Drain hose
2	Detergent dispenser	5	Power supply cord
3	Control panel	6	Service flap

NOTE

The product picture is for illustration only, please refer to real product as reference.

Accessories

4 x Cover caps	1 x Supply hose cold water	1 x Owner's manual	Acoustic sponge or Acoustic panel (optional)
			or 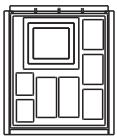

QUICK START GUIDE

⚠ CAUTION

- Before washing, please make sure the machine is installed properly.
- Your appliance was thoroughly checked before it left the factory. To remove any residual water and to neutralize potential odors, it's recommended to clean your appliance before first use. For this reason, recommended to clean the inner drum by running the "DRUM CLEAN" or other program with the optional temperature of 90°C. Be careful not to put laundry and detergent in the machine.

⚠ Calibration

It's recommended to calibrate the machine, so that provide the best performance. The appliance is able to detect the amount of laundry loaded. This function is optimizing the product performance by minimizing energy and water consumption, saving you money and time. For this reason it's recommended to calibrate the appliance for best use.

1- Remove all accessories from the drum and close the door;

2- Insert the mains plug to the socket;

3- Switch on the washing machine, and within 10 seconds, press " TEMP" and "DELAY END" simultaneously (normally 3 seconds) until "t19" is displayed.

4- Press ▷|| to start the appliance, initially"0" is displayed, and then "***" (such as "126") is displayed to indicate the real time drum speed. If the machine is successfully calibrated, "PAS" will be displayed, otherwise, "FAL" will be displayed.

1. Before Washing

1. Plug in

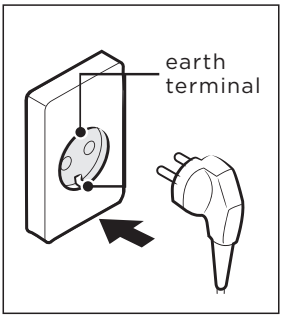

2. Open tap

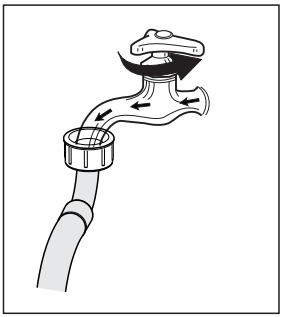

3. Load

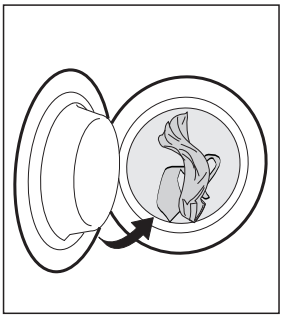

4. Close door

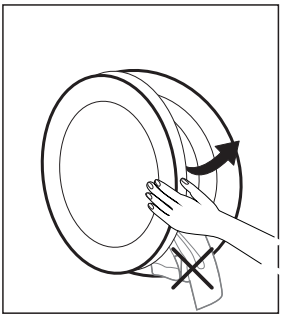

5. Add detergent

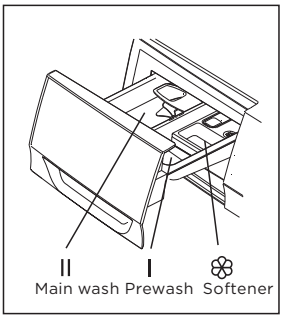

NOTE

- Detergent need to be added in compartment I if the pre-wash function is selected.
- When closing the door, please make sure that your clothes are not caught between the sealing ring and the machine door to prevent water leakage caused by pulling and damaging the sealing ring during operation.

2. Washing

1. Select programme

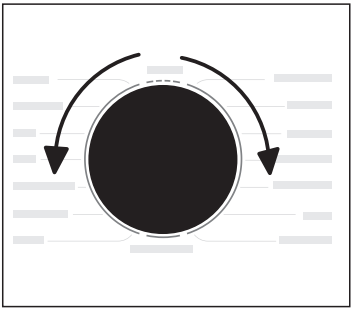

2. Select function or remain default settings

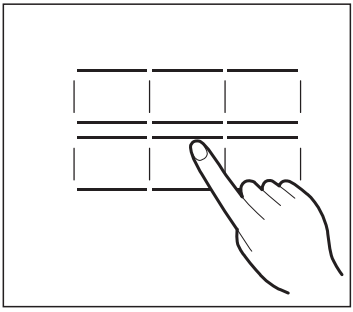

3. Press Start/Pause to start the program

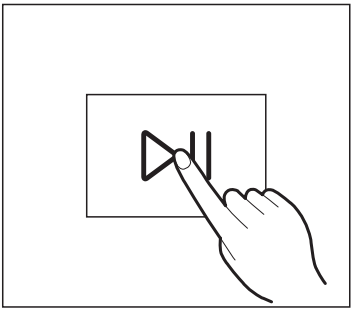

NOTE

1 : If default is selected, step 2 can be skipped.
2: The function button line chart is for reference only, please refer to real product as standard.

3. After Washing

Buzzer beep and “End” on display.

PRODUCT INSTALLATION

Tools Needed If Installation By Yourself (not include)

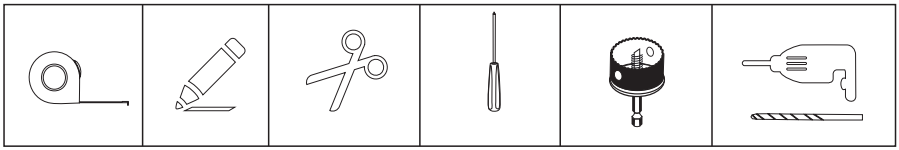

Installation Area

WARNING

- Stability is important to prevent the product from wandering!
- Make sure the machine is standing leveled and stable.
- Make sure that the product does not stand onto the power cord.
- Make sure to maintain the minimum distances from the walls as shown in the picture.

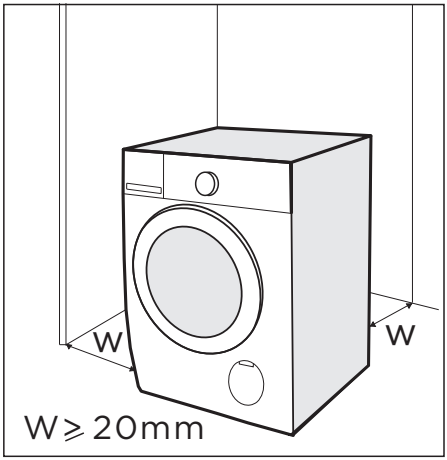

Before installing the machine, the location characterized as follows shall be selected:

1. Rigid, dry, and level surface.
2. Avoid direct sunlight.
3. Sufficient ventilation.
4. Room temperature is above 5 °C .
5. Keep far away from the heat sources such as coal or gas burning appliances.

Unpacking the Machine

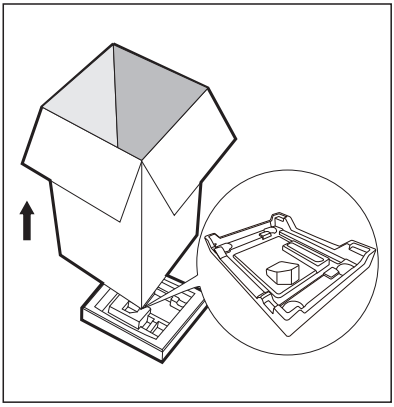

WARNING

- Packaging material (e.g. Films, Styrofoam) can be dangerous for children.
- There is a risk of suffocation ! Keep all packaging well away from children.

1. Remove the cardboard box and styrofoam packing.
2. Lift the machine and remove the base packaging.
3. Remove the tape securing the power supply cord and drain hose.
4. Remove the inlet hose from the drum.

Remove Transport Bolts

WARNING

You must remove the transport bolts from the backside before using the product.

1. Loosen the 4 transport bolts with a spanner.

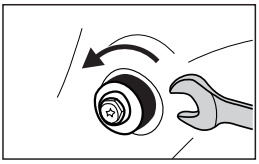

2. Remove the bolts including the rubber parts and keep them for future use.

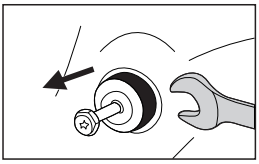

3. Close the holes using the cover caps.

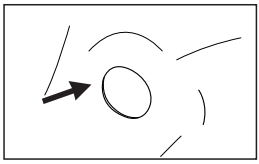

Levelling the Machine

WARNING

The lock nuts on all four feet must be screwed tightly against the housing.

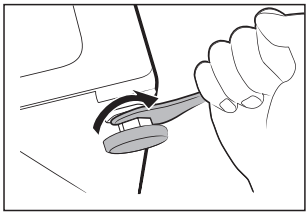

1. Loosen the lock nut.
2. Turn the foot until it reaches the floor.
3. Adjust the legs and lock the nuts with a spanner. Make sure the machine is level using a spirit level.

Connect the Water Supply Hose

WARNING

To prevent leakage or water damage, follow the instructions in this chapter.
• Do not kink, crush or modify water inlet hose.

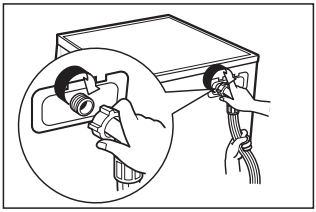

Connect the water supply hose to the water inlet valve and a water tap with cold water as indicated.

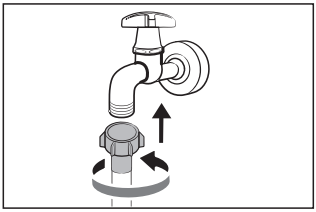

NOTE

• Connect manually, do not use tools. Check if the connections are tight.

Drain Hose

WARNING

• Do not kink or protract the drain hose.
• Position drain hose properly ,otherwise damage might result in water leakage.
• It is not allowed to remove the buckle of drain pipe.

There are two ways to place the end of drain hose:

1.Put it into the water trough.

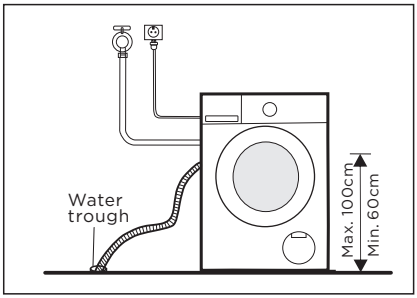

2.Connect it to the branch drain pipe of the trough.

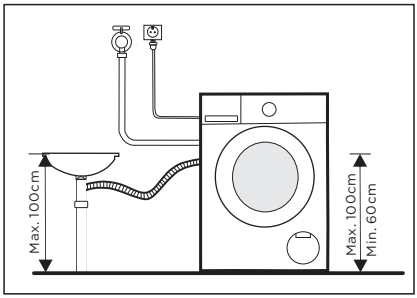

Acoustic Sponge / Panel

NOTE

- Please make sure to assemble the acoustic sponges, which can effectively reduce the noise caused by the machine while working, in order to provide you with a more peaceful and quiet living environment.

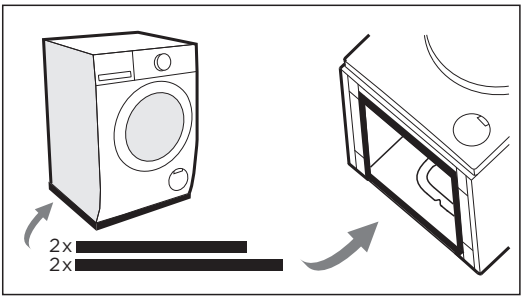

or

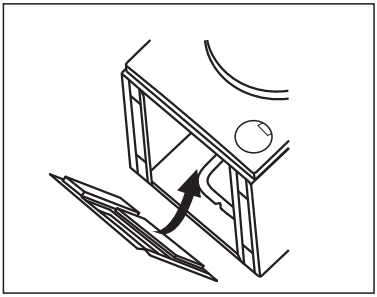

1. Get the machine laid on the floor, using some soft material like foam or clothes between the machine and floor for a protection;
2. Stick the 2x longer sponges to the longer bottom edges of machine, and the 2x shorter sponges to the shorter bottom edges, Installation of panel is same as sponges.

OPERATION INSTRUCTIONS

Before Each Washing

- The ambient temperature of the machine should be 5°C-40°C. If used under 0°C, the inlet valve and draining system may be damaged. If the machine is installed under freezing conditions, it should be transferred to normal ambient temperature to ensure the water supply hose and drain hose can unfreeze before use.
- Please check your laundry care labels and the detergent use instructions before wash. Use non-foaming or less-foaming detergent suitable for machine properly.

1. Take all items out of the pockets

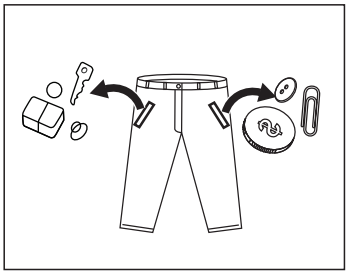

2. Sort laundry according to color and textile type

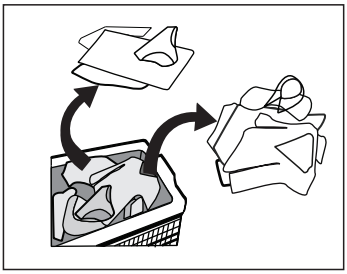

3. Tie together long textile strips and belts, close zips and button

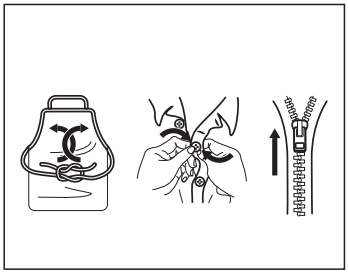

4. Put small items into a laundry bag

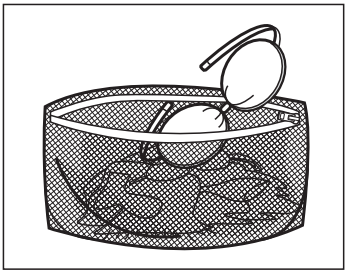

WARNING

- It is prohibited to wash clothes that adhere to any volatile or flammable substance such as cleaning agent, dry cleaning agent, spot remover, acetone, gasoline, kerosene, beauty oil, massage oil, animal oil, machinery oil, dry cleaning oil, volatile agent, alcohol, turpentine, wax, wax remover, banana water, disinfectant tablets, resin, etc.
- Washing single clothes items may easily create big eccentricity. Therefore it is suggested to add one or two more laundry items to the wash so that spin can be done smoothly.
- Do not wash, spin water-proof seats, mats ,or clothing.

Detergent Dispenser

I Pre wash

II Main wash

❀ Softener

Release button to pull out the dispenser

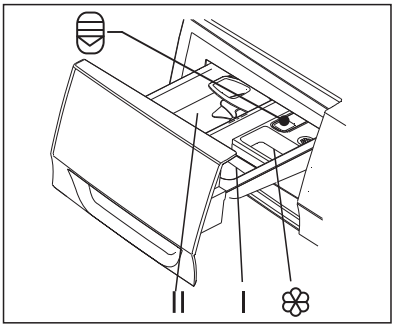

⚠ **CAUTION**

- Detergent only need to be added in “compartment I ”after selecting pre-wash function.

Programme	I	II / 💧	❀	Programme	I	II / 💧	❀
COTTON	○	●	○	RINSE&SPIN			○
SYNTHETICS	○	●	○	ALLERGY CARE	○	●	○
ECO 40-60		●	○	HEALTH GUARD	○	●	○
MIX	○	●	○	BULKY	○	●	○
JEANS	○	●	○	20°C		●	○
HANDWASH/WOOL		●	○	DELICATE		●	○
SPIN ONLY				QUICK45′		●	○
DRUM CLEAN				QUICK15′		●	○

● Means must ○ Means optional

Detergent Recommendation

Recommended washing detergent	Type of laundry and textile	Wash cycles	Washing temp. °C
Heavy-duty detergent with bleaching agents and optical brighteners	White laundry made from boil-proof cotton or linen	COTTON,ECO 40-60	40/60
Colour detergent without bleaching agent and optical brighteners	Coloured laundry made from cotton or linen	COTTON	20/40
Color or mild detergent without optical brighteners	Coloured laundry made from easy care fibres or synthetic materials	COTTON, SYNTHETICS	20/40
Mild washing detergent	Delicate textiles, silk, viscose	SYNTHETICS	20
Special wool detergent	Wool	HANDWASH/WOOL	20/40

NOTE

- Agglomerating or ropy detergent or additive can be diluted in some water before pouring it into the detergent dispenser, to avoid its inlet to get blocked and thus cause a water overflow.
- Please choose the suitable type of detergent to get a maximum of washing performance and a minimum of water and energy consumption.
- To achieve the best cleaning result a proper detergent dosing is important.
- Use a reduced detergent amount if the drum is not filled completely.
- Always adjust the amount of detergent to the water hardness, if your tap water is soft, use less detergent.
- Dose according to how dirty your laundry is, less dirty clothes require less detergent.
- Highly concentrated (compact detergent) requires particularly accurate dosing.

Following symptoms are a sign of detergent overdosing:
- heavy foam formation
- poor washing and rinsing result

Following symptoms are a sign of detergent under dosing:
- laundry turns grey
- built-up of limescale deposits on the drum, the heating element and/or the laundry

Control Panel

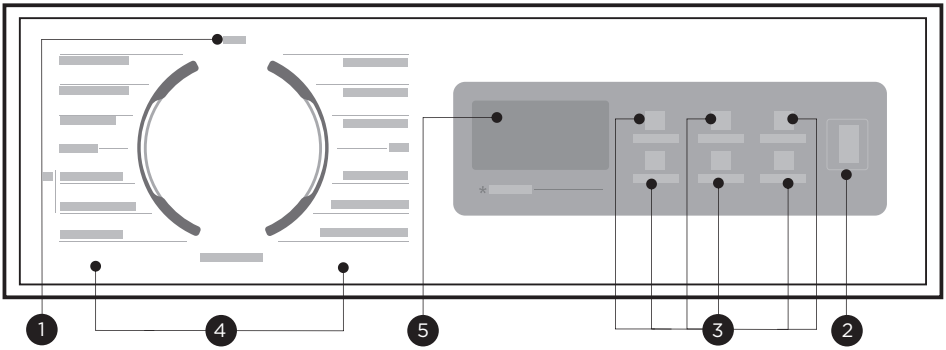

1 OFF

Turn the appliance off.

2 Start/Pause

Start or pause your programme.

3 Option

This allows you to select additional functions.

4 Programmes

Available according to the laundry type.

5 Display

The display shows settings, estimated remaining time, options and status messages.

NOTE

- The Chart is reference only, please refer to real product as standard.

Display

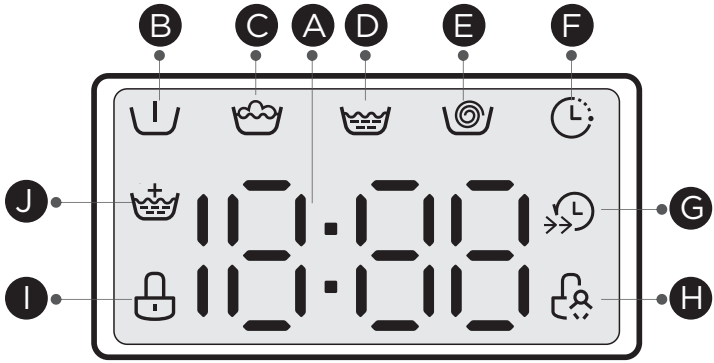

A Display	
Wash Time 125 Speed 400 End End	Delay Time 2H Error E30 Temp. 30
B Pre Wash	**C** Wash
D Rinse	**E** Spin
F Delay End	**G** Turbo
H Child Lock	**I** Door Lock
J Extra Rinse	

Programmes

Programme	Load (kg)	Default Time (h:min)
	9.0	9.0
COTTON	9.0	3:00
SYNTHETICS	4.5	2:20
ECO 40-60	9.0	3:48
MIX	9.0	1:30
JEANS	9.0	1:35
HANDWASH/WOOL	2.0	1:07
SPIN ONLY	9.0	0:12
DRUM CLEAN	--	1:18
RINSE&SPIN	9.0	0:20
ALLERGY CARE	4.5	2:28
HEALTH GUARD	4.5	1:48
BULKY	9.0	1:48
20°C	4.5	1:01
DELICATE	2.0	0:50
QUICK45′	2.0	0:45
QUICK15′	2.0	0:15

NOTE

- The parameters in this table are only for user's reference. The actual parameters maybe different with the parameters in above mentioned table.

Programmes

MF110W90BA10/W-UK							
Cycle	Nominal capacity in kg	Temperature setting °C	Cycle duration in hours and minutes	Energy consumption in kWh/operating cycle	Water consumption in liter/operating cycle	Highest temperature °C[1)]	Residual moisture in % /spin speed[2)]
COTTON	9.0	60	3:05	1.535	78	60	53%/1400
SYNTHETICS	4.5	40	2:20	0.655	48	40	35%/1200
20℃	4.5	20	1:01	0.189	44	20	65%/1000
QUICK 15′	2.0	Cold	0:15	0.030	31	Cold	70%/800
MIX	9.0	40	1:30	0.830	78	40	53%/1400
ECO 40-60[3)]	9.0	--	3:48	0.730	67.0	31	53.9%/1351
	4.5	--	2:54	0.448	49.0	30	53.9%/1351
	2.0	--	2:54	0.198	36.0	24	53.9%/1351

- The above data is for reference only, and the data may change due to different actual use conditions.
- The valves given for programmes other than the ECO 40-60 programme are indicative only.
- 20°C is able to clean lightly soiled cotton laundry, at a nominal temperature of 20 °C, which complies with the regulation (EU) 2019/2023.
- Concerning to EN 60456:2016/prA2019 With (EU)2019/2014, (EU)2019/2023, (EU)2021/340, (EU)2021/341

  The EU energy efficiency class is: A
  Energy test program: ECO 40-60. Other as the default.
  Half load for 9.0kg machine:4.5kg.
  Quarter load for 9.0kg machine:2.0kg.

Programmes

1) The highest temperature reached by the laundry in the wash cycle for at least 5 minutes.
2) Residual moisture after the wash cycle in water content percent and the spin speed at which this was achieved.
3) The ECO 40-60 programme is able to clean normally soiled cotton laundry declared to be washable at 40°C or 60°C, together in the same cycle. This programme is used to assess the compliance with the regulation (EU) 2019/2023.

The most efficient programmes in terms of energy consumption are generally those that perform at lower temperatures and longer duration.

Loading the household washing machine up to the capacity indicated for the respective programmes will contribute to energy and water savings.

Noise and remaining moisture content are influenced by the spinning speed: the higher the spinning speed in the spinning phase, the higher the noise and the lower the remaining moisture content.

⚠ **CAUTION**

- If there is any break in the power supply while the machine is operating, a special memory stores the selected programme. The machine will continue the programme when the power supply is re-established.

Programmes are available according to the laundry type.

Programmes	
COTTON	Hard-wearing textiles, heat-resistant textiles made of cotton or linen.
QUICK45′/15′	This procedure defaults to QUICK 45′, press the “TURBO” to switch to QUICK15′, which is suitable for washing few and not very dirty clothes quickly. Sometimes, after the QUICK15′ procedure is completed, the moisture content of clothes is high.
SYNTHETICS	Wash synthetics articles, for example: shirts, coats, blending. While washing the knitting textiles, detergent quantity shall be reduced due to its loose string construction and easily forming bubbles.
DELICATE	For delicate, washable textiles, e.g. made of silk, satin, synthetic fibres or blended fabrics.
JEANS	Specially for jeans.
MIX	Mixed load consisting of textiles made of cotton and synthetics.
20℃	Able to clean lightly soiled cotton laundry, at a nominal temperature of 20 °C.
ALLERGY CARE	Washing machine can effectively kill some allergens and achieve anti-allergic effect by adapting high temperature for sterilization.
HEALTH GUARD	It is applicable for daily laundries like cotton and synthetics. The steam can deeply penetrate the fiber, which effectively eliminate bacteria and germs, protecting your health.
BULKY	This program is specially designed for washing Bulky.
HANDWASH/ WOOL	Hand or machine-washable wool or richwool textiles. Especially gentle wash programme to prevent shrinkage, longer programme pauses (textiles rest in wash liquor).
SPIN ONLY	Spins and drains the water.
ECO 40-60	Able to clean normally soiled cotton laundry declared to be washable at 40 °C or 60 °C, together in the same cycle.
DRUM CLEAN	Specially set in this machine to clean the drum and tube. It applys 90 °C high temperature sterilization to make the clothes washing more green. When this programme is performed, the clothes or other washing cannot be added. When proper amount of chlorine bleaching agent is put in, the barrel cleaning effect will be better. The customer can use this programme regularly according to the need.
RINSE & SPIN	Rinses and then spins the laundry, and then drains the water.

NOTE

- The Chart is reference only, please refer to real product as standard.
- When the programme is finished , “End” will flash on the display, Please select the knob to the Off position.

Option

Cycle	Default Temp.(℃)	Default spin speed (rpm)	Additional functions
		1400	
COTTON	40	1400	
SYNTHETICS	40	1200	
ECO 40-60	--	--	
MIX	40	1400	
JEANS	30	800	
HANDWASH/WOOL	40	600	
SPIN ONLY	--	1000	
DRUM CLEAN	90	--	
RINSE&SPIN	--	1000	
ALLERGY CARE	60	1000	
HEALTH GUARD	40	1000	
BULKY	40	1000	
20°C	20	1000	
DELICATE	30	800	
QUICK45′	20	800	
QUICK15′	Cold	800	

NOTE

- For the maximum spin speed, program time, and other details of the ECO 40-60 program, please refer to the content on the Product Fiche page.
- The table shows which cycle offers which options for adjustment.

Spin Speed
When needed, the spinning speed can be adjusted pressing the Speed button in the following steps: 1400:0-400-600-800-1000-1200-1400

Delay End
1. Select a programme.
2.Press the [DELAY END] button to choose the delaying time 0-24H.
3.Press [Start/Pause] to start the delay operation.

Choose programme › Setting time › Start

To cancel the Delay function, press the “DELAY END” button before starting the program until the display shows 0 H. If the program has already started, switch the appliance off and afterwards on and select a new programme.

Pre Wash
Extra washing function before the main washing cycle starts to increase the washing performance.

Note: Detergent needs to be added to the compartment I.

Extra Rinse
The laundry will undergo an extra rinse after selecting this function.

Turbo
The function can decrease the washing time.

Temp.
When needed, the washing temperature can be adjusted by pressing the temperature button in the following steps: Cold -20°C-30°C - 40°C- 60°C - 90°C.

NOTE

Usage counter

1:Please press "TURBO" and "DELAY END" on control panel simultaneously and continuously for around 5sec. under power-on status, and then press "TURBO" twice after hearing a valid tone, the device display shows digits--the value can indicate the times of equipment usage.
2.Press "TURBO" and "DELAY END" on control panel simultaneously and continuously for around 5sec. and customer can resume to normal operation.

Child Lock
To avoid mis operation by children.

SPIN/🔒*

Press [SPIN/🔒*] simultaneously for 3 sec until the buzzer beep.
The child lock indicator switches on.

CAUTION

When the Child Lock is activated, the display will alternately show “CL” and the remaining time.
Pressing any other button will cause the Child Lock indicator to flash.
When the program ends, “CL” and “End” will alternate on the display.

The Child Lock deactivates the function of all buttons except the Child lock button!
Only the simultaneous pressing of the button [SPIN/🔒*] can deactivate the Child Lock!
Please deactivate the Child Lock before selecting a new program!

Mute the buzzer

TEMP/🔇*

Choose the Programme › Press the [TEMP/🔇*] button for 3 sec., the buzzer is mute.

To act the buzzer function, press the button again for 3 seconds. The setting will be kept until the next reset.

CAUTION

- After Muting the buzzer function, the sounds will not be activated any more.

START PAUSE

Reload

This operation can be executed during the washing progress.
When the drum is still rolling and there is large amount of water with high temperature in the drum.
The state is unsafe and the door cannot be opened forcefully.
To press [START PAUSE] for 3 sec. to reload, and start the clothes adding in the midway function. Please follow the steps as bellow:
1.Wait until the drum stops rotation.
2.The door lock is unlocked.
3.Close the door when the clothes are reloaded and press the [START PAUSE] button.

Press[START PAUSE]3sec. › Clothes › Reload the clothes › Start

CAUTION

- Don't use the Reload function when the water level over the edge of the inner tub or the temperature is higher.

Product Fiche

Supplier's name or trade mark([a])([c]):	
Supplier's address([a])([c]):	
Model identifier([a]):MF110W90BA10/W-UK	
General product parameters:	

Parameter	Value		Parameter	Value	
Rated capacity([b])(kg)	9.0		Dimensions in cm([a])([c])	Height	85
				Width	60
				Depth	54
Energy efficiency index([b]) (EEI_w)	46.7		Energy efficiency class([b])	A ([d])	
Washing efficiency index([b])	1.031		Rinsing effectiveness (g/kg)([b])	5.0	
Energy consumption in kWh per cycle, based on the eco 40-60 programme at a combination of full and partial loads. Actual energy consumption will depend on how the appliance is used.	0.444		Water consumption in litre per cycle, based on the eco 40-60 programme at a combination of full and partial loads. Actual water consumption will depend on how the appliance is used and on the hardness of the water.	50	
Maximum temperature inside the treated textile ([b])(℃)	Rated capacity	31	Weighted remaining moisture content ([b])(%)	53.9	
	Half	30			
	Quarter	24			
Spin speed([b])(rpm)	Rated capacity	1351	Spin-drying efficiency class ([b])	B ([d])	
	Half	1351			
	Quarter	1351			
Programme duration([b])(h:min)	Rated capacity	3:48	Type	free-standing	
	Half	2:54			
	Quarter	2:54			
Airborne acoustical noise emissions in the spinning phase([b]) (dB(A) re l pW)	72		Airborne acoustical noise emission class ([b])(spinning phase)	A ([d])	
Off-mode (W) (if applicable)	0.50		Standby mode (W)(if applicable)	N/A	
Delay start (W) (if applicable)	4.00		Networked standby (W)(if applicable)	N/A	

Minimum duration of the guarantee offered by the supplier ([a])([c]):	
This product has been designed to release silver ions during the washing cycle	NO
Additional information:	
Weblink to the supplier's website, where the information in point 9 of Annex II to Commission Regulation (EU)2019/2023([b]) is found:	

([a]) this item shall not be considered relevant for the purposes of Article 2(6) of Regulation (EU) 2017/1369,
([b]) for the eco 40-60 programme.
([c]) changes to this item shall not be considered relevant for the purposes of paragraph 4 of Article 4 of Regulation (EU)2017/1369.
([d]) it the product database automatically generates the definitive content of this cell, the supplier shall not enter these data.

1) The actual energy consumption will depend on how the appliance is used.
2) The actual water consumption will depend on how the appliance is used and on the hardness of the water.
3) Delivery of the spare parts within 15 working days after having received the order.

Product Data Sheet concerning (EU) 2019/2014

The product data sheet for your appliance can be found online.
Go to https://eprel.ec.europe.eu and enter the model identifier for your appliance to download the data sheet.
The model identifier for your appliance can be found in the technical specifications section.

CLEANING AND MAINTENANCE

Cleaning and Care

WARNING

- Always unplug the appliance and close the water tap before cleaning and maintenance.
- When cleaning the product, do not stretch your hands, feet or arms into the bottom of the machine case to prevent scratches.

Cleaning the Cabinet

Proper maintenance on the machine can extend its working life. The surface can be cleaned with diluted non-abrasive neutral detergents when necessary. If there is any water overflow, use a towel to wipe it off immediately. Never use sharp items to clean the appliance.

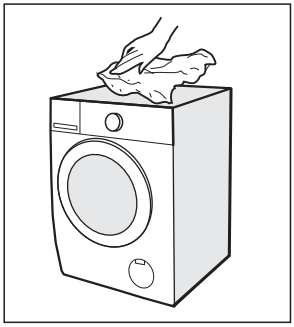

CAUTION

- Never use abrasive or caustic agents. Such as formic acids or its diluted solvents or similar substances, like alcohol or chemical products.

Cleaning the Drum

Any rust stains left inside the drum by metal articles must be removed immediately using chlorine-free detergents. Never use steel wool for cleaning the drum!

NOTE

- Keep any laundry away from the machine while cleaning the drum.

Cleaning the Door Seal and Glass

Wipe the glass and seal after each wash to remove lint and stains. If lint builds up it can cause leakages.
Remove any coins, buttons and other objects from the seal after each wash.
Clean the door seal and glass every month to ensure the normal operation of the appliance.

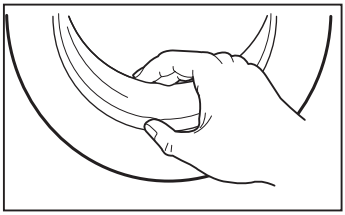

Cleaning the Inlet Filter

NOTE

- Diminishing water flow is a sign that the filter needs to be cleaned.

1. Close the tap and remove the water supply hose from it.

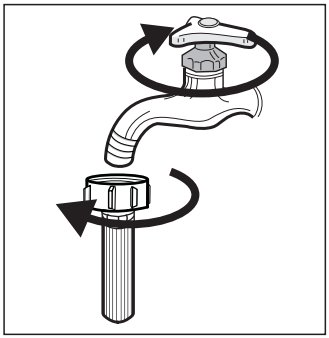

2. Clean the filter with a brush.

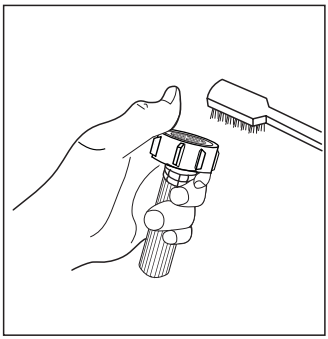

3. Unscrew the water supply hose from the backside of the machine.
   Pull out the filter with long nose pliers.

4. Use a brush to clean the filter.

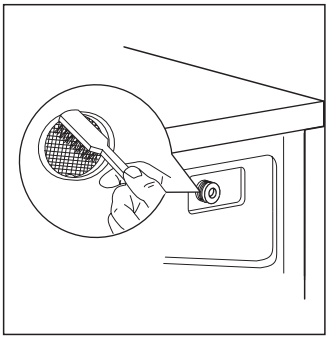

5. Reinstall the filter to the water inlet and reconnect the water supply hose.

6. Clean the Inlet filter every 3 months to ensure the normal operation of the appliance.

Cleaning the Detergent Dispenser

- Press down the arrow location on softener cover inside the dispenser drawer.
- Lift the clip up and take out softener cover and wash all grooves with water.
- Clean the inside of the recess with a brush.
- Restore the softener cover and push the drawer into position.

1.Pull out the dispenser drawer with press the A

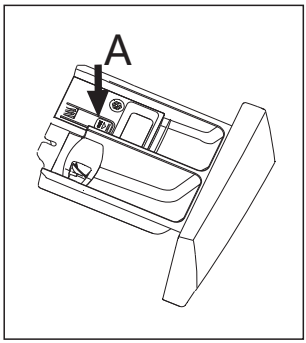

2.Clean the dispenser drawer under water

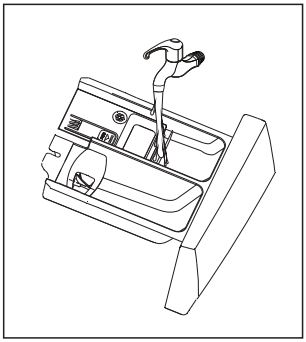

3. Clean the recess with a soft brush

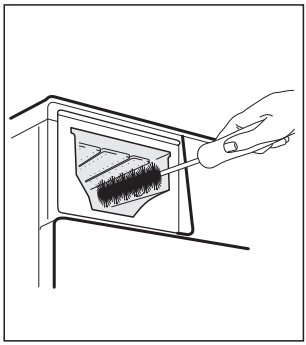

4. Insert the dispenser drawer

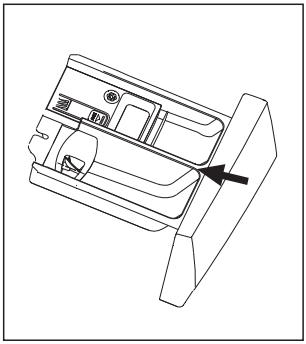

NOTE

- Do not use abrasive or caustic agents to clean plastic parts.
- Clean the detergent dispenser every 3 months to ensure the normal operation of the appliance.

Cleaning the Drain Pump Filter

WARNING

- Make sure that the machine has finished the washing cycle and is empty. Switch it off and unplug it before cleaning the drain pump filter.
- Be careful of hot water. Wait for water cooling down. Risk of scalding!
- Clean the filter periodically every 3 months to ensure the normal operation of the appliance.

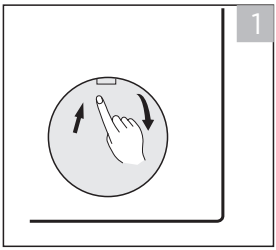

Open the lower cover cap

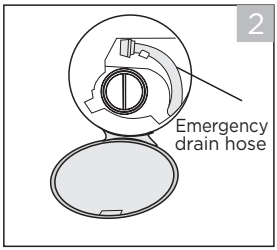

Pull out the emergency drain hose, and take off the hose cap

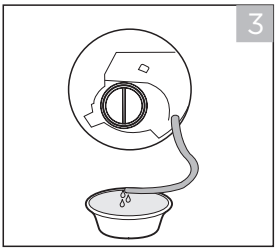

After water runs out, reset the drain hose

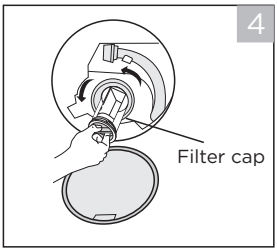

Open the filter by turning to the counter clockwise

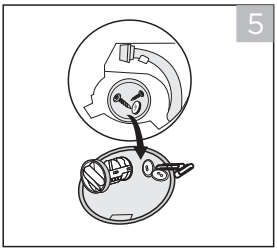

Remove extraneous matter

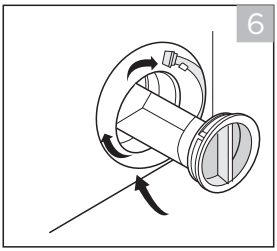

Carefully reinsert the filter and screw the lower cover cap in clockwise

CAUTION

- Make sure that valve cap and emergency drain hose are reinstalled properly, cap plates should be inserted aligning to hole plates otherwise water may leak.
- Some machines don't have emergency drain hose, so step 2 and step 3 can be skipped. Rotate lower cover cap directly to make water run into basin.
- When the appliance is in use and depending on the programme selected there can be hot water in the pump. Never remove the pump cover during a wash cycle, always wait until the appliance has finished the cycle, and is empty. When replacing the cover, ensure it is securely re-tightened.

TROUBLE SHOOTING

Whenever there is a problem with the appliance, check if you can solve it following the tables below. If the problem persists, please contact the customer service.

Description	Possible Cause	Solution
Appliance does not start	Door is not closed properly.Clothes are stuck.	Close the door properly and restart. Check the laundry.
Door can´t be opened	Safety protection is activated.	Disconnect the power and restart.
Water leakage	Connections are not tight enough.	Check and fasten the water inlet pipe. Check and clean the outlet hose.
Detergent residues in the detergent dispenser	Detergent is damp and/or clotted.	Clean and wipe the detergent dispenser dry.
Indicator or display does not work	PC board or harness have connection problems.	Switch off the power and check if the mains plug is connected properly.
Abnormal noise	Fixing bolts are still in place. Floor is not solid or level.	Check if the fixing bolts have been removed. Make sure the appliance is installed on a solid and level floor.

Error Codes

Description	Possible Cause	Solution
E30	Door is not closed properly.	Close the door properly and restart.
E10	Water injecting problem during wash cycle.	Check if the water pressure is high enough. Straighten the water pipe. Clean the inlet valve filter.
E21	Overtime water draining	Check the drain hose for blockage.
E12	Water overflow	Restart the appliance.
EXX	Others	Restart the appliance. If problem persists, please contact the customer service.

TRADEMARKS, COPYRIGHTS AND LEGAL STATEMENT

Midea logo, word marks, trade name, trade dress and all versions thereof are valuable assets of Midea Group and/or its affiliates (“Midea”), to which Midea owns trademarks, copyrights and other intellectual property rights, and all good will derived from using any part of an Midea trademark. Use of Midea trademark for commercial purposes without the prior written consent of Midea may constitute trademark infringement or unfair competition in violation of relevant laws.

This manual is created by Midea and Midea reserves all copyrights thereof. No entity or individual may use, duplicate, modify, distribute in whole or in part this manual, or bundle or sell with other products without the prior written consent of Midea.

All the described functions and instructions were up to date at the time of printing this manual. However, the actual product may vary due to improved functions and designs.

DISPOSAL AND RECYCLING

Important Instructions for Environment

Compliance with the WEEE Directive and Disposing of the Waster Product:
This product complies with EU WEEE Directive (2012/19/EU). This product bears a classification symbol for waster electrical and electronic equipment (WEEE).

This symbol indicates that this product shall not be disposed with other household wastes at the end of its service life. Used device must be returned to offcial collection point for recycling of electrical electronic devices. To find these collection systems please contact to your local authorities or retailer where the product was purchased. Each household performs important role in recovering and recycling of old appliance. Appropriate disposal of used appliance helps prevent potential negative consequences for the environment and human health.

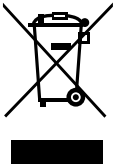

Compliance with RoHS Directive

The product you have purchased complies with EU RoHS Directive (2011/65/EU). It does not contain harmful and prohibited materials specified in the Directive.

Package Information

Packaging materials of the product are manufactured from recyclable materials in accordance with our National Environment Regulations. Do not dispose of the packaging materials together with the domestic or other wastes. Take them to the packaging material collection points designated by the local authorities.

DATA PROTECTION NOTICE

For the provision of the services agreed with the customer,
we agree to comply without restriction with all stipulations of applicable data protection law, in line with agreed countries within which services to the customer will be delivered, as well as, where applicable, the EU General Data Protection Regulation (GDPR).

Generally, our data processing is to fulfil our obligation under contract with you and for product safety reasons, to safeguard your rights in connection with warranty and product registration questions. In some cases, but only if appropriate data protection is ensured, personal data might be transferred to recipients located outside of the European Economic Area.

Further information are provided on request. You can contact our Data Protection Officer via **MideaDPO@midea.com.** To exercise your rights such as right to object your personal date being processed for direct marketing purposes, please contact us via **MideaDPO@midea.com.** To find further information, please follow the QR Code.

WARRANTY CARD

NOTES

We provide a guarantee for this machine in accordance with the following conditions: You have a manufacturer's warranty of _____ years from the date of purchase (proof of purchase must be provided). Our General Terms and Conditions apply.

Your device / serial number

Purchase date:

Place of purchase:

Do you have any questions ?

We are happy to support you !

http://www.midea.com

Customer Service

Spare parts for your appliance are available for a minimum of 10 years following EU COMMISSION REGULATION 2019/2023 ANNEX II Ecodesign requirements.

In case of questions, please contact our local customer service center.

WARNING

Risk of electric shock

- Never try to repair an appliance which is defective or presumed to defective. You may put your own and future users' lives in danger. Only authorised specialists are allowed to carry out this repair work.
- Improper repair will void the warranty and subsequent damages can't be recognized!

Transport

IMPORTANT STEPS WHEN MOVING THE APPLIANCE

- Unplug the appliance and close the water inlet tap.
- Check if the door and the detergent dispenser are closed properly.
- Remove the water inlet pipe and the outlet hose from the house installations.
- Let the water drain completely from the appliance (see "Cleaning the Drain Pump Filter")
- Important: Re-install the 4 transport bolts in the back of the appliance.
- This appliance is heavy. Transport with care. Never hold any protruding part of the machine when lifting. The machine door can not be used as a handle.

Midea

make yourself at home

V1.0
16138100A43049