Operating instructions
Heat-pump dryer



To avoid the risk of accidents or damage to the appliance it is **essential** to read these instructions before it is installed and used for the first time.

en-GB

M.-Nr. 13 148 470

Contents

Caring for the environment **4**
Disposal of fluff or accessories 4
Warnings and safety instructions **5**
Operating the tumble dryer **14**
Control panel 14
How the sensor controls work 16
Wash2Dry 16
Before using for the first time **17**
Installation 17
Downtime after installation 17
Networking 17
Requirements for networking 18
Energy saving tips **19**
1. Notes on correct laundry care ... **20**
Points to note regarding washed laundry 20
Preparing the laundry before drying 20
Drying 21
Care symbols 21
Selecting the correct drying level 21
2. Load the tumble dryer **22**
Loading the laundry 22
Checking the FragranceDos socket 22
3. Select a programme and start it **23**
Switching on the tumble dryer 23
Selecting a programme 23
1. Selecting drying programmes using the programme selector ... 23
2. Selecting drying programmes via the MobileStart programme selector position 23
3. Selecting a drying programme via the Wash2Dry programme selector position 23
Selecting programme settings 24
Selecting the drying level 24
Selecting the programme running time for *Time Dry/DryFresh* 24
Selecting DryCare 40 25
Switching on delay start 25
Starting a programme 25
4. Remove the laundry **26**
End of programme/Anti-crease 26
Unloading the drum 26
Delay start/SmartStart **27**
SmartStart 28
Programme chart **29**
Changing the programme sequence **33**
Changing a programme once it has started 33
Adding or removing laundry 33
Condensed water container **34**
Emptying the condensed water container 34
Fragrance flacon **35**
FragranceDos 35
Removing the protective seal from the fragrance flacon 35
Inserting a fragrance flacon 35
Opening the fragrance flacon 36
Closing the fragrance flacon 37
Removing/replacing the fragrance flacon 37
Cleaning and care **39**
Cleaning the tumble dryer 39
Fluff filters 39
Removing the fragrance flacon ... 39
Removing visible fluff 39
Cleaning the fluff filters and air flow openings thoroughly 40
Cleaning the fluff filters with water 41
Cleaning the residual moisture sensor 41
Cleaning the plinth filter 42
Removing the plinth filter 43
Cleaning the plinth filter 43
Cleaning the plinth filter access panel 45
Troubleshooting **46**
Indicator lights or information on the time display triggered when a programme is cancelled 46

Contents

Indicator lights or information on the time display 47
Unsatisfactory drying results 48
The drying cycle duration is very long 50
Other problems 51
Replacing the plinth filter 52
Reactivating the plinth filter 53
Checking the heat exchanger 53
Service **54**
Contact in the event of a fault 54
EPREL database 54
Warranty 54
Optional accessories 54
Installation **55**
Front view 55
Rear view 56
Transporting the tumble dryer 56
Transporting the tumble dryer to its installation site 56
Installation 57
Levelling the tumble dryer 57
Downtime after installation 57
Ventilation 58
Before moving the tumble dryer again 58
Additional installation requirements 58
External condensed water outlet 59
Installation conditions requiring a non-return valve 59
Arranging the drain hose 59
Examples 60
Changing the door hinging 63
Changing the hinging over 63
Refitting 68
Electrical connection 69
Technical data **70**
EU Conformity declaration 70
UK Conformity declaration 71
Consumption data **72**
Programmable functions **73**
Programming 73
P00 Factory default 74
P01 Cottons drying levels 74
P02 Minimum iron drying levels 75
P04 Cooling down temperature 75
P05 Buzzer volume 75
P06 Keypad tone 75
P07 PIN code 75
P08 Conductivity 76
P11 Control field switch-off behaviour 76
P13 Memory 76
P14 Anti-crease 77
P19 Buzzer active 77
P20 Airways indicator 77
P22 Backlight brightness dimmed 77
P25 Duration of programme end buzzer 77
P26 Welcome tone 78
P90 Operating hours 78
Networking 78
Switching off WiFi 78
P24 RemoteUpdate 78
P31 Remote control 79
P32 SmartGrid 80
Copyrights and licences for the communication module 81

Caring for the environment

Disposing of the packaging material

The packaging material is used for handling and protects the appliance from transport damage.

Recycling the packaging material reduces the use of raw materials. Use material-specific collection points for valuable materials and take advantage of return options. Your Miele dealer will take the packaging material away.

Disposing of your old appliance

Electrical and electronic appliances contain many valuable materials. They also contain certain materials, compounds and components which were essential for their correct functioning and safety. These could be hazardous to human health and to the environment if disposed of with household waste or if handled incorrectly. Please do not, therefore, dispose of your old appliance with household waste.



Take care not to damage your tumble dryer's pipework and heat exchanger before or during disposal in an authorised, environmentally friendly manner. This is to ensure that coolant in the tumble dryer and oil in the compressor is contained, and will not leak into the environment.

Instead, please make use of officially designated collection and disposal points to dispose of and recycle electrical and electronic appliances in your local community, with your dealer or with Miele, free of charge. By law, you are solely responsible for deleting any personal data from the old appliance prior to disposal. You are legally obliged to remove any old batteries which are not securely enclosed by the appliance and to remove any lamps without destroying them, where this is possible. These must be taken to a suitable collection point where they can be handed in free of charge. Please ensure that your old appliance poses no risk to children while being stored for disposal.

Disposal of fluff or accessories

Abrasion causes environmentally harmful microplastic particles to be released from garments containing synthetic fibres, which remain on the laundry after washing. For this reason, dispose of the fluff collected by the fluff filters with your household waste. To prevent microplastics from spreading into the waste water system, fluff must not be drained away with the water.
Dispose of unusable accessories, e.g. empty fragrance flacons or a defective plinth filter, with your household waste.

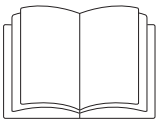

It is essential to read these instructions.



This tumble dryer contains a refrigerant that is flammable and explosive.

This tumble dryer complies with all current local and national safety requirements. However, inappropriate use can lead to personal injury and damage to property.

Read the operating instructions carefully before using the tumble dryer. They contain important information on safety, installation, use and maintenance. This prevents both personal injury and damage to the tumble dryer.

In accordance with standard IEC 60335-1, Miele expressly and strongly advises that you read and follow the instructions in the chapter on installing the tumble dryer as well as the safety instructions and warnings.

Miele cannot be held liable for damage caused by non-compliance with these instructions.

Keep these operating instructions in a safe place and pass them on to any future owner.

Correct application

▶ This tumble dryer is intended for use in domestic households and similar working and residential environments.

▶ This tumble dryer is not intended for outdoor use.

▶ It must be used only as a domestic appliance to dry items which have been washed in a water solution and which are marked on the manufacturer's care label as being suitable for tumble drying. If using dry cleaning kits, do so at your own risk, and follow the instructions provided on the packaging.
Any other applications may be dangerous. Miele cannot be held liable for damage resulting from incorrect or improper use or operation.

▶ This tumble dryer can only be used by people with reduced physical, sensory or mental capabilities, or lack of experience or knowledge, if they are supervised whilst using it or have been shown how to use it in a safe way and understand and recognise the consequences of incorrect operation.

Safety with children

▶ Children under 8 years of age must be kept away from the tumble dryer unless they are constantly supervised.

▶ Children 8 years and older may only use the tumble dryer unsupervised if they have been shown how to use it safely and recognise and understand the consequences of incorrect operation.

▶ Children must not be allowed to clean or maintain the tumble dryer unsupervised.

▶ Please supervise children in the vicinity of the tumble dryer and do not let them play with it.

Technical safety

▶ Before setting up the tumble dryer, check it for any externally visible damage.
Do not install or use a damaged tumble dryer.

▶ Before connecting the tumble dryer, ensure that the connection data on the data plate (fuse rating, voltage and frequency) match the mains electricity supply. If in any doubt, consult a qualified electrician.

▶ Temporary or permanent operation on an autonomous power supply system or a power supply system that is not synchronised with the mains power supply (e.g. island networks, back-up systems) is possible. A prerequisite for operation is that the power supply system complies with the specifications of EN 50160 or an equivalent standard.
The function and operation of the protective measures provided in the domestic electrical installation and in this Miele product must also be maintained in isolated operation or in operation that is not synchronised with the mains power supply, or these measures must be replaced by equivalent measures in the installation. As described, for example, in the current version of BS OHSAS 18001–2 ISO 45001.

▶ The electrical safety of this tumble dryer can only be guaranteed when correctly earthed. It is essential that this standard safety requirement is met. If in any doubt, please have the household wiring system tested by a qualified electrician. Miele cannot be held liable for the consequences of an inadequate earthing system (e.g. electric shock).

▶ Do not connect the appliance to the mains electricity supply by an extension lead, multi-socket adapter or similar. These can overheat and are a fire hazard.

▶ If the mains connection cable is damaged it must always be replaced by a qualified specialist to protect the user from danger.

▶ Unauthorised repairs could result in unforeseen dangers for the user, for which the manufacturer cannot accept liability. Maintenance or repairs must only be carried out by a qualified specialist or Miele Customer Service.

▶ If defective safety-relevant components are replaced, Miele can only guarantee full compliance with safety requirements if genuine Miele replacement parts are used.

▶ The tumble dryer must be isolated from the electricity supply in the event of a fault and during cleaning and maintenance.

▶ This tumble dryer must not be used in a non-stationary location (e.g. on a ship).

▶ Do not make any alterations to the tumble dryer, unless authorised to do so by Miele.

▶ This tumble dryer is fitted with a special lamp to cope with particular conditions (e.g. temperature, moisture, chemical resistance, abrasion resistance and vibration). This special lamp must only be used for the purpose for which it is intended. It is not suitable for room lighting. Replacement lamps may only be fitted by a qualified specialist or by Miele Customer Service.

▶ This tumble dryer uses a gaseous refrigerant which is condensed by the compressor. Having been increased to a high temperature level as as result of the condensing process, the refrigerant passes through a closed refrigerant circuit. The heat generated is transferred to the drying air as flows through the heat exchanger.

- The humming noises caused by the heat pump during the drying process are normal. They do not impair the efficient functioning of the tumble dryer.
- The refrigerant is environmentally friendly and causes no damage to the ozone layer.

⚠ Damage to the tumble dryer by switching it on too soon.

This can damage the heat pump.

After setting up the tumble dryer, wait for at least one hour before starting a drying programme.



▶ The R290 refrigerant contained in this tumble dryer is flammable and explosive. If the tumble dryer is damaged, proceed as follows:

- Avoid naked flames or anything which creates a spark.
- Disconnect the tumble dryer from the electrical supply.
- Air the room where the tumble dryer is located.
- Contact the Miele Customer Service Department.

⚠ Risk of fire and explosion due to damage to the tumble dryer.

The refrigerant is flammable and explosive if it leaks.

Take measures to protect the tumble dryer against damage. Do not make any alterations to the tumble dryer.

▶ Follow the instructions in “Installation” and “Technical data”.

▶ The accessibility of the plug must always be ensured, in order to disconnect the tumble dryer from the mains.

▶ Do not block the gap between the bottom of the tumble dryer and the floor with plinth facings, deep pile carpet etc. This would hinder a sufficient flow of air to the dryer.

▶ Make sure the dryer door can be opened without hindrance after installation.

Correct use

▶ The maximum load for this tumble dryer is 9.0 kg (dry weight). The maximum recommended loads for individual programmes are given in the Programme chart.

▶ To prevent the risk of fire, do not connect the tumble dryer via a controllable socket (e.g. a timer or a peak-load switch-off device). If the drying programme is interrupted before the end of the cooling down phase, this could cause the laundry to self-ignite.

▶ **Warning:** Do not switch the dryer off before the drying programme has finished. If this is done, the laundry must be hung up or spread out to cool it down.

▶ Fabric conditioner and similar products must be used according to the instructions on the manufacturer's packaging.

▶ Remove all items from pockets (e.g. lighters, matches).

▶ The fluff filters must be cleaned after every drying cycle.

▶ The fluff filters or the plinth filter must be thoroughly dried after cleaning. Wet fluff/plinth filters could cause operational faults while drying.

▶ To prevent the risk of fire, textiles that have not been cleaned thoroughly or are still soiled with deposits of any kind must not be dried in this tumble dryer. This applies in particular to textiles that

- have not been washed.
- have not been thoroughly cleaned and are still soiled with grease, oil or other deposits (such as cooking oils, cosmetics, lotions, etc.). If items have not been thoroughly cleaned, there is a danger that they might ignite when heated, even after they have been removed from the tumble dryer at the end of the programme.

- have been treated with inflammable cleaning agents or which contain residues of acetone, alcohol, benzene, petrol, kerosene, stain remover, turpentine, wax and wax remover or other chemicals (e.g. mops and floor cloths).
- items that have been splashed with hair lacquer, hair spray, nail varnish remover or similar substances.

When washing such heavily soiled items:
ensure that you use sufficient detergent and select a high temperature. If in doubt, wash the items several times.

▶ To prevent the risk of fire, these textiles must not be tumble dried:

- textiles that have been cleaned using chemicals (e.g. professional dry-cleaning agents)
- textiles which contain a large proportion of rubber, foam rubber or rubber-like materials. For example, products made from latex foam rubber, shower caps, waterproof textiles, rubberised articles and items of clothing and pillows with foam rubber filling.
- textiles containing padding or fillings which are damaged (e.g. pillows, jackets). The filling could fall out and cause a risk of fire.

▶ The heat pump that is essential to the operation of this tumble dryer generates a great deal of heat inside its casing. There must be a reliable means of dissipating this heat. Otherwise loads could take longer to dry or the tumble dryer might sustain damage in the long term.

The following mandatory requirements must be met:

- permanent room ventilation from the beginning to the end of every drying programme
- a gap between the floor and the bottom of the tumble dryer (this must not be blocked or obstructed in any way)

▶ The tumble dryer must not be hosed down.

▶ Do not let anyone sit or lean on the door, as this can cause the tumble dryer to tip up.

▶ In many programmes, the heating phase is followed by a cooling down phase to ensure that the items are not too hot to handle when you remove them (this also avoids the danger of the laundry self-igniting). The programme is not finished until the cooling down phase has been completed.
As soon as the programme has finished, remove all laundry from the drum.

▶ Always close the door after use. This way you will avoid the danger of:

- Children climbing onto or into the dryer or hiding things in it.
- Pets or other small animals climbing into it.

▶ The tumble dryer must not be used without fluff filters or

- with damaged fluff filters, or
- with a damaged plinth filter.

This would cause an excessive build-up of fluff which in turn would cause a fault.

▶ Do not install the tumble dryer in a room where there is a risk of frost occurring. At temperatures around freezing point the tumble dryer may not be able to operate properly. There is a risk of damage if the condensed water is allowed to freeze in the pump or hoses.
The ambient room temperature should be between 2°C and 35°C.

▶ If the water is drained externally through the drain hose instead of being collected in the condensed water container, make sure the drain hose is securely attached if you hang it in a sink or basin to avoid the hose slipping and the water causing damage.

▶ Condensed water is not drinking water.
It can cause health problems in both people and animals if consumed.

▶ Always keep the area around the tumble dryer free of dust and fluff.
Dust drawn into the tumble dryer can cause blockages in the heat exchanger over time.

Using a fragrance flacon (optional accessory)

▶ Only use genuine Miele original fragrance flacons.

▶ The fragrance flacon must be stored in its packaging so please make sure you retain this.

▶ Caution. The fragrance can leak out of the flacon. Make sure that you always keep the flacon, or the fluff filter with the flacon inserted in it, in a horizontal position when carrying and do not tip or place down on any surface.

▶ Use an absorbent cloth to wipe up any fragrance which has leaked out of the flacon onto the floor, the dryer or any dryer components (e.g. the fluff filter) immediately.

▶ If fragrance which has leaked out of a flacon: comes into contact with the **skin** - wash the skin thoroughly with soap and water; comes in contact with the **eyes** - rinse the eyes with clean water for at least 15 minutes; is swallowed - rinse out the **mouth** thoroughly with clean water. Seek medical advice in the case of contact with the eyes or if fragrance has been swallowed.

▶ If fragrance which has leaked out of a flacon comes in contact with clothing, change the clothing immediately. Wash the clothing or any cloths used for mopping up fragrance thoroughly with plenty of water and detergent.

▶ There is the risk of fire or damage to the tumble dryer if the following instructions are not observed:

- Never refill a flacon with fragrance.
- Never use a faulty fragrance flacon.

▶ Dispose of an empty fragrance flacon with the household waste and never use it for any other purpose.

▶ Please also observe the information supplied with the fragrance flacon.

Accessories

▶ Only use genuine Miele original spare parts and accessories with this appliance. If non-Miele parts are used, warranty, performance and product liability claims will be invalidated.

▶ The tumble dryer can be combined with a Miele washing machine in a washer-dryer stack. The appropriate “WTV” stacking kit (available to order) to match your tumble dryer and washing machine is required.

▶ If you order a plinth for this tumble dryer (available from Miele as an optional accessory - depending on country), make sure it is the correct one.

▶ Miele original spare parts are kept in stock for at least 10 years and up to 15 years after discontinuation of your tumble dryer.

⚠ Miele cannot be held liable for damage caused by non-compliance with these Warning and Safety instructions.

Operating the tumble dryer

Control panel

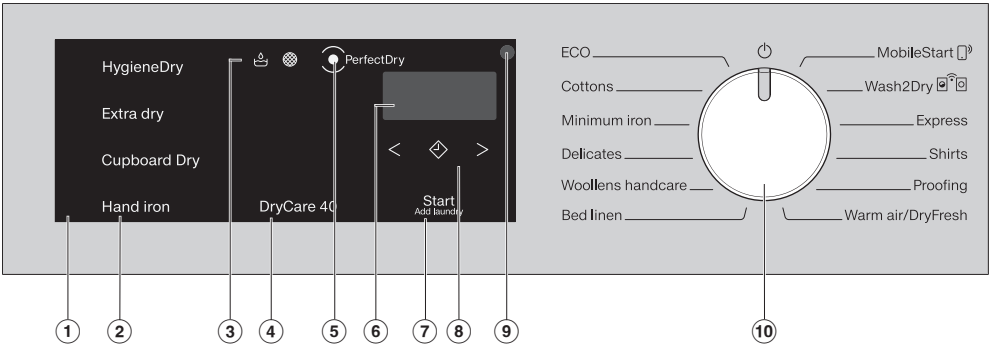

① **Control field**
The control field consists of various sensor controls, a time display and indicator lights.

② **Sensor controls for drying levels**
After selecting a drying level programme with the programme selector, the recommended drying level lights up. The drying levels that can be selected for the corresponding programme are dimly lit.

③ **Indicator lights**
(These light up when necessary.)

Empty the condensate container.

Clean the fluff and plinth filters.

④ ***DryCare40* sensor control**
Cares for temperature-sensitive textiles.

⑤ ***PerfectDry* indicator**
flashes after the programme has started and switches off when the running time is displayed. *PerfectDry* measures the residual moisture of the laundry. In programmes with selectable drying levels, *PerfectDry* dries the laundry precisely, although the result is also influenced by the calcium content of the water.
lights up towards the end of the programme once the selected drying level has been reached, except in the case of the *Woollens handcare, Warm air/DryFresh* programmes.

⑥ **Time display**
After the programme has started, the programme running time will appear on the display in hours and minutes.

– When Delay start is being used, the programme running time will appear after the Delay start period has elapsed.
– With most programmes, the running time displayed may vary or "jump". The following factors, among others, affect the programme running time displayed: the quantity of laundry, the type of fabric and the residual moisture in the laundry. The electronic module adapts to these factors with increasing accuracy.

⑦ ***Start/Add laundry* sensor control**
Touching the *Start/Add laundry* sensor control starts a programme. The current programme can be interrupted to add laundry. The programme can be started when the sensor control is flashing on and off. The sensor control lights up constantly once the programme has started.

⑧ **Sensor controls**
for the Delay start function or the *Time Dry/DryFresh* programme running time

◇	After touching the ◇ sensor control, a later start time for the programme (Delay start) can be selected. Once selected, ◇ lights up brightly.
< >	The < or > sensor controls are used for selecting the duration of the Delay start period or the duration of the *Warm air/ DryFresh* programme.

⑨ **Optical interface**
This is used by the Customer Service Department as a transmission point.

⑩ **Programme selector**
for selecting programmes and for switching off the appliance. The tumble dryer is switched on by selecting a programme and switched off by turning the programme selector to the ⏻ position.
If the tumble dryer is connected to the WiFi network, you will have access to the following alternative options for selecting programmes.

MobileStart
You can operate your tumble dryer remotely with the Miele app.

Wash2Dry
A drying programme tailored to the laundry is set in conjunction with the connected washing machine.

How the sensor controls work

The ②, ④, ⑦ and ⑧ sensor controls react to fingertip contact. If a sensor control is lit, it can be selected.

If a sensor control is brightly lit, this means it is currently selected.

If a sensor control is dimly lit, this means it can be selected.

Drum lighting

When you open the door of the tumble dryer, the drum is illuminated along with the area immediately in front of the dryer. This prevents you from accidentally leaving behind any items in the drum or in your laundry basket.
The drum lighting will go out automatically to save energy.

Wash2Dry

Once the programme has come to a proper end, the Miele washing machine transfers the programme data via the router to which the networked tumble dryer is also connected, as well as transferring it to the Miele Cloud. The tumble dryer automatically sets a drying programme tailored to the laundry based on the transferred programme data.

All you need to do is start the drying programme once you have loaded the tumble dryer. No further programme settings are required on the tumble dryer.

Tip: The drying programme must be started within 24 hours of the end of the wash programme. The data will be kept available for the tumble dryer during this period, but will be overwritten when a new wash programme ends.

Tip: Do not disconnect the tumble dryer from the network. The programme data transferred by the washing machine will be received by the tumble dryer as soon as you select *Wash2Dry*.
If you have disconnected the appliance from the network beforehand, this will cause a delay in receiving the data.

In order to use the *Wash2Dry* function, the Miele washing machine and tumble dryer must be networked using Miele@home services.

Tip: Set up Miele@home as described in these operating instructions.

Installation

Before using the appliance for the first time, check that you have followed all the instructions under “Installation”.

Read these operating instructions, paying particular attention to the information provided under “Installation”.

Removing the protective foil and stickers

■ Remove:

- Any protective film from the door
- Any stickers from the front and the lid

Please do not remove any labels (e.g. the data plate) which are visible when you open the door.

Downtime after installation

⚠ Damage to the tumble dryer by switching it on too soon.

This can damage the heat pump.

After setting up the tumble dryer wait for at least one hour before switching it on.

Networking

Your tumble dryer is equipped with an integrated WiFi module. The WiFi module makes it possible to connect to your home network and to use the Miele app on a mobile device.

Once your tumble dryer has been connected via WiFi, the connection is automatically re-established every time it is switched on.

Make sure that your WiFi network signal is strong enough in the place where you intend to install your tumble dryer.

Connecting your tumble dryer to your WiFi network will increase energy consumption, even when the tumble dryer is switched off.

Smart Extras via the Miele app*

Networking via the Miele app gives you access to numerous Smart Extras, including:

- Access status information.
- Use additional helpful functions.
- Keep your tumble dryer up to date with the latest Miele developments via software updates.

You can find more detailed information about Smart Extras on the Miele website, in the Apple App Store® or in the Google Play Store™.

*This is a separate digital offer from Miele & Cie. KG. The range of functions can vary depending on the model and the country. Acceptance of the Terms and Conditions and Privacy Policy for Miele digital products & services in the Miele app required. Miele reserves the right to change or discontinue the digital offer at any time.

Miele App

The Miele App is available to download free of charge from the Apple App Store® or from the Google Play Store™.

Download on the App Store

ANDROID APP ON Google Play

Requirements for networking

Note the following requirements for networking:

1. A home network is available at the installation site.
   Have the WiFi password ready.
2. The Miele app is available on a mobile device.
3. You have a user account in the Miele app.

You can also carry out the networking at a later date. Skip the “Networking menu option during commissioning.

Setting up Miele@home

There are 2 ways of connecting:

1. Via the Miele app (default)
2. Via WPS
   To do so, you will need a WPS-compatible router.

Logging in via the Miele app

The Miele app can be used to connect to your network.

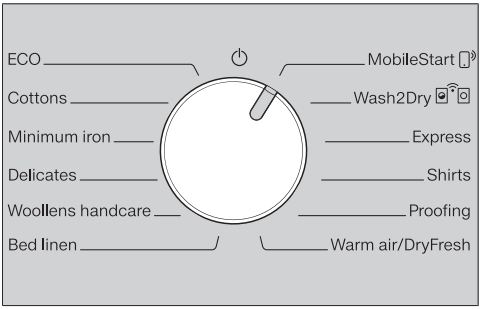

- Turn the programme selector to *MobileStart*.

APP appears on the time display and the timeout starts to count down from 10 minutes. The Miele app will guide you through the remaining steps.

When you have successfully connected, *Con* will appear on the time display.

Logging in via WPS

- Turn the programme selector to *MobileStart*.
- Touch the sensor control until *WPS* appears on the time display and a short keypad tone sounds.

The timeout then starts to count down from 2 minutes on the time display.

- Activate the WPS function on your router within 2 minutes.

When you have successfully connected, *Con* will appear on the time display.

Tip: If the connection has not been set up when the timeout has finished counting down, repeat the process.

This dryer with heat-pump technology is designed for energy-saving drying cycles. However, you can save a little more energy with the following measures as the drying time is not extended unnecessarily.

- Make sure your laundry is spun at the maximum spin speed before drying. The higher the spin speed, the greater the savings that can be made in energy and time during drying, e.g. approx. 20 % energy can be saved if spun at 1600 rpm instead of 1000 rpm.
- Always dry using the maximum specified load size for the programme whenever possible. A full drum helps to save energy because you don't have to start another drying programme. This will mean that the energy consumption for the amount of laundry is at its most economical.
- Make sure that the room temperature is not too high. If there are other heat producing appliances in the room in which the dryer is located, make sure the room is well ventilated and switch the other appliances off, if possible.
- Clean the fluff filters in the door opening after every drying cycle.

Please refer to "Cleaning and care" for information on cleaning the fluff filters and the plinth filter.

- If possible, make use of time-variable, low-cost electricity tariffs. Ask your energy supplier for information. Your tumble dryer's delay start function will be useful as you can select when during the next 24 hours you want drying to start automatically.

1. Notes on correct laundry care

Points to note regarding washed laundry

- When washing very heavily soiled items ensure that you use sufficient detergent and select a high temperature. If in doubt, wash the items several times.
- Do not put soaking wet items into the tumble dryer. Make sure your laundry is thoroughly spun before drying. The higher the spin speed, the greater the savings that can be made in energy and time during drying.
- New dark coloured garments should be washed and dried separately from light coloured garments to avoid the danger of colours running and discolouring other garments or even plastic components in the dryer. Dark coloured fibres can also settle on light coloured garments and vice versa.
- Starched laundry can be dried in the tumble dryer. To achieve the usual finish, double the amount of starch should be used.

Preparing the laundry before drying

⚠ Damage due to foreign objects which were not removed from the laundry.
Foreign objects can melt, burn, or explode.
Ensure that any foreign objects, e.g. detergent dispensing balls, lighters, etc. have been removed from the laundry.

⚠ Risk of fire due to incorrect use and operation.
The laundry can burn and destroy the dryer and the surroundings.
See “Warning and Safety” instructions for further information.

- Sort the laundry according to the type of fibre and weave, size, garment care label symbol and the drying level required.
- Check seams and stitching to ensure that padding and linings are intact. This way you will avoid the danger of fillings coming out. These could catch fire when being dried.
- Disentangle the laundry.
- Tie together textile belts and ties.
- Fasten duvet covers and pillow cases to prevent small items from being rolled up inside them.
- Fasten hooks and eyes.
- Leave jackets open and undo any long zips so that textiles dry evenly.
- Sew in or remove underwiring from bras.
- If necessary, reduce the size of the load for these types of fabric. Easy care fabric tends to crease more, the larger the load. This is particularly the case for garments made from very fine weave fabric, such as shirts or blouses.

Drying

Tip: Read the “Programme chart”, which contains a complete list of data for programmes and load sizes.

- Always observe the maximum recommended load size for each programme. This will mean that the energy consumption for the amount of laundry is at its most economical.
- Down-filled garments have linings which have a tendency to shrink, depending on the quality of the item. Only use the *Woollens handcare* programme for these textiles.
- Pure linen should only be tumble dried if it is specified as suitable on the care label. The surface of the fabric may otherwise become rough. Only use the *Woollens handcare* programme for these textiles.
- Woollens and wool blends are susceptible to becoming matted or shrinking. Only use the *Woollens handcare* programme for these textiles.
- Jersey fabrics (e.g. T-shirts, underwear) tend to shrink when they are washed for the first time. To prevent further shrinking, do not overdry jersey fabrics. Buy jersey garments that are slightly bigger than the size you would normally wear if possible.
- Reduce the load size for fabrics that are particularly heat-sensitive or susceptible to creasing. Also select the *DryCare 40* Extra.

Care symbols

Drying	
	Temperature
	Normal or higher
	Reduced*
	Do not tumble dry

* Recommendation: select *DryCare 40*

Ironing	
	Temperature
	••• hot, •• medium, • lower
	Do not iron

Selecting the correct drying level

- *HygieneDry* for special hygiene requirements
- *Extra dry* for multi-layered and very thick fabrics
- *Cupboard Dry* for fabrics that can shrink. Or for light cotton or jersey fabrics
- *Hand iron* if you want to iron the laundry after drying, for example

Tip: You can alter the drying levels (to be damper or drier) for the *Cottons* and *Minimum iron* programmes. See “Programmable functions” for more information.

2. Load the tumble dryer

Loading the laundry

Preventing damage to fabrics.
Before loading the dryer, read “1. Notes on correct laundry care”.



- Open the door.
- Remove any items that have been left inside the drum.
- Unfold the laundry and load loosely into the drum.

Do not overload the drum. Doing so will cause unnecessary wear and tear to the laundry and affect the drying result. It is also likely to cause more creasing.

Laundry items may be damaged if they get trapped by the door.

Checking the FragranceDos socket

If you are not using a fragrance flacon, check that the FragranceDos socket is closed.

The “Fragrance flacon” chapter describes how to use the fragrance flacon.

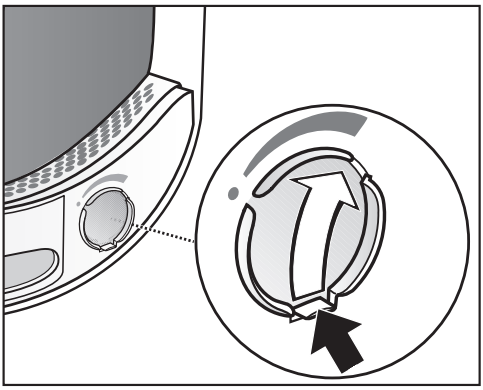

- Push the tab down completely (see arrow) so that the socket is closed. Otherwise, fluff will accumulate here.

Close the door

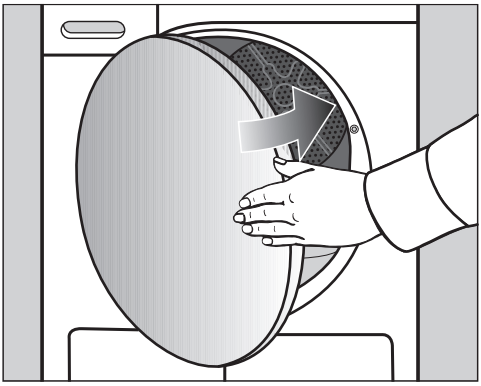

- Shut the door with a gentle swing.

Switching on the tumble dryer

The tumble dryer is switched on by selecting a programme and switched off by turning the programme selector to the ⏻ position.

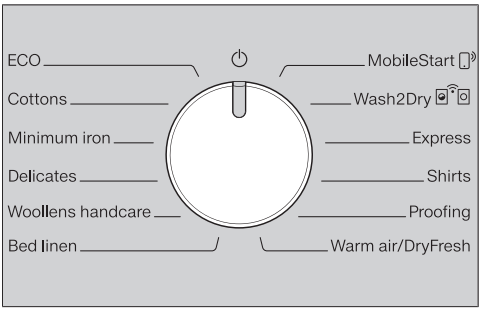

- Turn the programme selector to a programme.

Selecting a programme

There are 3 possible ways to select a programme:

1. Selecting drying programmes using the programme selector

- Turn the programme selector to the required programme.

A drying level may also light up and durations will appear in the time display.

2. Selecting drying programmes via the MobileStart programme selector position

- Turn the programme selector to *MobileStart*.

Con will light up on the time display.

- Touch the *Start/Add laundry* sensor control.

The tumble dryer can now be operated via a mobile device together with the Miele app.

3. Selecting a drying programme via the Wash2Dry programme selector position

- Once the wash process has ended, place the clean laundry in the tumble dryer.
- Turn the programme selector to *Wash2Dry*.

If the connection is successful, *C ... n ...* will flash in the display . Once the washing machine programme has come to a proper end, the finish time and drying level will be displayed on the tumble dryer.

- To start the programme, all you need to do is press the *Start/Add laundry* sensor control on the tumble dryer.

Programme changeover is not available on this tumble dryer after washing delicate textiles (e.g. curtains) in special wash programmes.

Readouts on the time display:

C...n...	Dryer starting query
---	Programme cannot be changed over on dryer or dryer waiting for data
noC	Dryer not connected

Selecting programme settings

Selecting the drying level

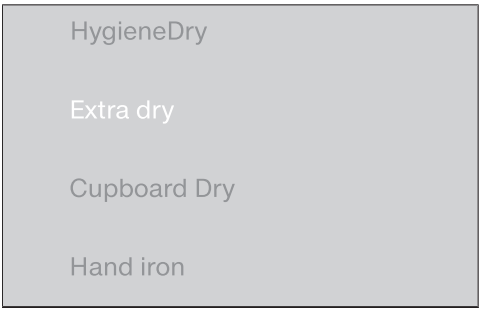

■ Touch the sensor control for the drying level you want.

The selected drying level lights up brightly.

HygieneDry drying level

Tip: Select this drying level to meet specific hygiene requirements for robust garments with the ⊡ care symbol.

Items will be dried with a temperature that is constant over an extended period of time (extends the temperature holding time). This kills off micro-organisms (such as germs or dust mites) and reduces allergens in the laundry.

Tip: Reduce the load size for the corresponding programme to half the maximum load size specified in these operating instructions.

HygieneDry temperature holding time

- An estimated programme running time is displayed at the start of a programme.
- The programme completes the normal drying process for laundry care first. The drying time counts down to 0 minutes. Then the temperature holding time starts.
- At the start of the temperature holding time, the remaining programme running time is extended by 85 minutes to produce a hygienic drying result.

A programme for which the *HygieneDry* drying level has been selected should not be interrupted,
as this would prevent the micro-organisms from being killed off.
Do not cancel the drying programme.

Selecting the programme running time for *Time Dry/DryFresh*

The programme running time can be selected in 10-minute increments. The programme running time can be between *0:20* minutes and up to *2:00* hours.



■ Touch the < or > sensor control repeatedly until the required programme running time appears on the time display.

Selecting DryCare 40

It can be used for all fabrics that are free of wool and are washable at temperatures of 40 °C and above.

This option dries fabrics gently at a very low temperature.

For the best possible drying result: Reduce the load size for the corresponding programme to half the maximum load size specified in these operating instructions.
Exceptions: you must reduce programmes with a maximum load size of 9 kg to 4 kg.

■ Touch the *DryCare 40* sensor control. It then lights up brightly.

- *DryCare 40* can be selected with the following programmes:
  - *Cottons*
  - *Minimum iron*
  - *Shirts/Blouses*
  - *Warm air/DryFresh*
- *DryCare 40* is always activated/cannot be deselected with *Delicates*.

DryCare 40 is not available for all drying levels.

Switching on delay start

The start of the programme can be delayed from 30 minutes up to 24 hours. This allows you to make use of night-time economy electricity rates, for example.

Starting a programme

■ Touch the flashing *Start/Add laundry* sensor control.

The *Start/Add laundry* sensor control lights up.

Programme sequence

- The tumble dryer constantly measures the drying level and calculates the required programme running time based on the residual moisture of the items. The *PerfectDry* indicator flashes during the first measuring phase. The indicator lights up when the selected drying level is complete.
- The drying level that has been reached pulses dimly. When the selected drying level is reached, it will pulse brightly.
- The empty drum detection feature will detect if you place a small number of items inside the tumble dryer or load it with dry laundry. The automatic load recognition function will then restrict the running time of the selected programme once it has started. The fabrics will be gently dried or aired. In this case, the *PerfectDry* indicator does not light up.

To prevent laundry wearing out avoid overdrying it.

- Before the programme finishes, the laundry is cooled.

Adding laundry

You can add laundry items after the programme has started.

■ Follow the description in “Changing the programme sequence – Adding or removing laundry”.

4. Remove the laundry

End of programme/Anti-crease

End of programme: *0:00* lights up in the time display and the *Start/Add laundry* sensor control goes out. A buzzer sounds. Or in some cases bars flash in the time display (*L⁻⁻* ... *C_⁻* ... *C⁻⁻* ...)

The end of the programme is followed by the anti-crease phase, which will run for up to 2 hours. There is no anti-crease phase at the end of the *Woollens handcare* programme.
See “Programmable functions”, “*P14* Anti-crease”.

The tumble dryer switches off automatically.

Unloading the drum

Only open the door when the drying process has finished. Otherwise, the laundry will not be properly dried through and cooled down.

- Pull the door open at the side with the orange marker.

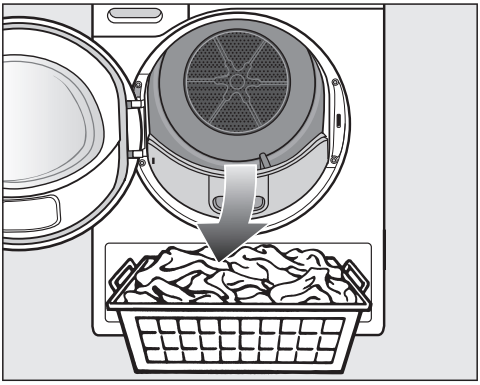

- Remove the laundry.

Items left in the dryer could be damaged by overdrying when the dryer is used the next time.
Always remove all items from the drum.

- Turn the programme selector to the ⏻ position.
- Remove the fluff from the 2 fluff filters in the door opening: see “Cleaning and care”.
- Shut the door gently.
- Empty the condensate container.

Tip: When drying a full load in the *Cottons* and *ECO* programmes, we recommend that you drain the condensed water externally through the drain hose. This will mean you do not need to empty the condensate container at intermittent periods.

Selecting the Delay start function

With Delay start, you can delay the start of a programme from *0:30* minutes up to *24h* (hours).

Delay start cannot be used with the *Warm air/DryFresh* programme.

- Start by selecting a programme with programme settings.



- Touch the sensor control.

The sensor control lights up brightly.

- Touch the > or < sensor control repeatedly until the required Delay start time appears in the time display.

The time will count upwards or downwards automatically if you touch the > or < sensor controls continuously.

Starting Delay start

- Touch the *Start/Add laundry* sensor control to start the Delay start function.

- Delay start times of more than *10h* will count down in hours and then in minutes until the start of the programme.
- With a longer delay start time, the drum will rotate occasionally to untangle the laundry. This is not a fault.

Altering Delay start

If you would like to alter the Delay start function after starting a programme, the function must be cancelled first.

- Turn the programme selector to the ⏻ position.

The tumble dryer is switched off and Delay start is cancelled.

- Select a programme.
- Select a Delay start time.

Adding laundry during ongoing delay start period

- Follow the description in “Changing the programme sequence – Adding or removing laundry”.

SmartStart

The SmartStart function lets you define a time period during which your tumble dryer will start automatically. The appliance will start on receipt of a signal, e.g. from your energy supplier, that indicates that the electricity tariff is particularly economical.

This function is active when the *P32* SmartGrid programmable function is activated

The time period can be defined between 30 minutes and 24 hours. During this period, the tumble dryer waits for the signal from the energy supplier. If no signal is sent during the defined period, the tumble dryer starts the drying programme.

Setting the time period

If the *P32* SmartGrid programmable function is activated, the function of the sensor control changes. The time display no longer shows the Delay start period, and instead shows the time period in which your tumble dryer can be started automatically.

The procedure for setting this is the same as for setting the time for Delay start.

- Touch the sensor control.
- Set the time period you want using the < or > sensor controls.
- Touch the *Start/Add laundry* sensor control.

A flashing readout appears in the time display for the duration: *0...* .

The period can be ended by opening the door.

All weights marked with * are based on the weight of dry laundry.

ECO	**max.** 9 kg*
Use for	Cotton items such as those described under *Cottons Cupboard Dry* with normal residual moisture.
Note	- In the *ECO* programme, the *Cupboard Dry* degree of dryness is achieved. - The *ECO* programme is the most energy-efficient for drying cotton items with normal residual moisture levels.
Note for test institutes	- The *ECO* programme is the test programme in accordance with Regulations (EU) 2023/2533 and (EU) 2023/2534 for the energy label measured in accordance with EN 61121. This programme is used to evaluate compliance with the EU Ecodesign legislation. - With the *Cottons* and *ECO* programme settings, drain the condensed water externally through the drain hose.

Programme chart

Cottons	**max.** 9 kg*
HygieneDry	
Use for	- Cottons and linen fabric which will be in direct contact with the skin, e.g. underwear, baby clothes, bed linen, towelling. - Other hard-wearing fabrics with special hygiene requirements.
Tip	- Use for special hygiene requirements. - Reduce to half the maximum load size.
Extra dry, Cupboard Dry	
Use for	Single and multi-layered cotton items. For example, T-shirts, underwear, baby clothes, workwear, jackets, covers, aprons, overalls, hand towels, bath towels, bathrobes and flannelette/bed linen.
Tip	- Select *Extra dry* for multi-layered and very thick fabrics. - Do not use *Extra dry* for jersey fabrics (e.g. T-shirts, underwear, baby clothes) because they can shrink.
Hand iron	
Use for	All cotton or linen fabrics requiring further processing. For example, table linen, bed linen, or starched laundry.
Minimum iron	**max.** 4 kg*
HygieneDry, Cupboard Dry, Hand iron	
Use for	Minimum iron fabrics made of synthetic, cotton or mixed fibre. For example, workwear, overalls, pullovers, dresses, trousers, table linen and tights.
Tip	- Use *HygieneDry* for hard-wearing fabrics with special hygiene requirements. - Reduce to half the maximum load size.
Delicates	**max.** 2.5 kg*
Cupboard Dry, Hand iron	
Use for	Delicate items with the ⊡ care symbol made of synthetic fibre, mixed fibre, rayon and minimum iron cotton. For example, shirts, blouses, lingerie and appliquéd garments.
Tip	The load should be reduced further for a particularly crease-free drying process.

Woollens handcare	**max.** 2 kg*
Use for	Woollen garments and fabric containing wool blends, e.g. pullovers, cardigans, tights.
Note	- Wool and wool blend items are only fluffed up; they are not dried completely. - Remove the garments as soon as the programme has finished.
Bed linen	**max.** 4 kg*
HygieneDry, Extra dry, Cupboard Dry, Hand iron	
Use for	Bed linen, pillowcases
Tip	- Use *HygieneDry* for hard-wearing fabrics with special hygiene requirements. - Reduce to half the maximum load size.
MobileStart	
The Miele app is used for selecting programmes and operating the appliance.	
Wash2Dry	
The programme is selected automatically in conjunction with the programme selection on the connected washing machine.	
Express	**max.** 4 kg*
Extra dry, Cupboard Dry, Hand iron	
Use for	Fabrics with the symbol that are suitable for the *Cottons* programme.
Note	The programme running time is shorter.
Shirts/Blouses	**max.** 2 kg*
Cupboard Dry, Hand iron	
Use for	All shirts and blouses.

Programme chart

Proofing	**max.** 2.5 kg*
Use for	Fabrics suitable for tumble drying, e.g. microfibre fabrics; skiwear; outdoor clothing; fine, close-weave cotton garments (poplin); and tablecloths.
Note	- With this programme, items can only be dried to the *Cupboard Dry* level. - This programme includes an additional proofing fixing phase. - Only use proofing agents which are stated by the manufacturer as being “suitable for use on membrane fabrics”. These agents contain fluorochemical compounds. - Do not dry fabrics which have been treated with proofing agents containing paraffin. This poses a fire hazard.
Warm air/DryFresh	**max.** 9 kg*
Note	- For drying fabrics *(Warm air)* - For freshening up fabrics *(DryFresh)*[1] - Do not select the longest drying time to start with. Check the items as you are drying them to find the optimum time.
Use for	- Airing: multi-layered fabrics whose layers have different drying characteristics, e.g. jackets, pillows, sleeping bags and other bulky items - Drying: individual items, e.g. bath towels, swimwear and tea towels - Freshening up: clean fabrics[1]
[1] Tip	You can reduce or eliminate unwanted odours in clean, dry fabrics. To do this, use *Warm air/DryFresh* in conjunction with the DryFresh flacon (optional accessory[2]). Select a time of at least 60 minutes and reduce the load size in order to freshen up the textiles effectively. [2] Insert fragrance flacon and set the intensity: see “Fragrance flacon”

Changing a programme once it has started

It is no longer possible to change the selected programme. This is to prevent the operation of the machine being tampered with.

If you adjust the programme selector, the *-0-* symbol will light up in the time display. The *-0-* symbol goes out when you select the original programme.

Cancelling the current programme

- Turn the programme selector to the ⏻ position.

The programme is cancelled.

You can now select a new programme.

Adding or removing laundry

You have forgotten something but the programme is already running.

- Touch the *Start/Add laundry* sensor control.

The word *Add* will appear in the time display. The *Start/Add laundry* sensor control flashes slowly.

- Open the door.
- Add or remove laundry items.

You can still change the programme selection.

- Close the door.
- Touch the *Start/Add laundry* sensor control.

The programme continues.

Exceptions when adding laundry

In some cases – for example, during the cooling phase or the *Proofing* programme – it is not possible to add laundry items.

In these cases, the word *Add* is not displayed.

In exceptional cases, the door can be opened while the programme is running.

Emptying the condensed water container

Condensate container

The condensed water is collected in the condensate container.

Emptying interval: empty the condensate container after every drying programme.

The ♨ indicator light will light up if the maximum level of the condensate container is reached.
To turn the ♨ indicator light off: open and close the door while the dryer is switched on.

⚠ Damage to the door and the fascia panel when removing the condensed water container.
The door and the fascia panel can sustain damage.
Always close the door completely.

* This does not apply to right-hand hinged models.

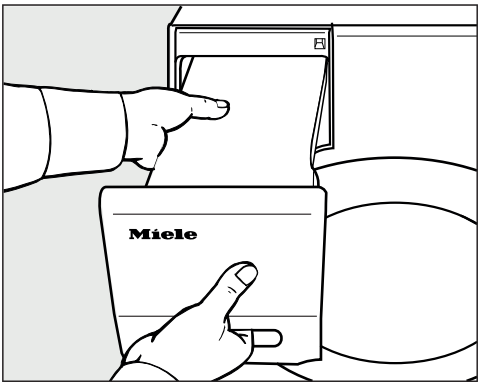

- Remove the condensed water container.
- To prevent water from running out, keep it in a horizontal position when carrying it. Hold the condensed water container by the front panel and at the back.

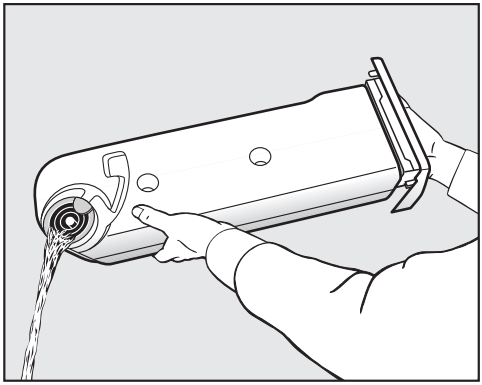

- Empty the condensed water container.
- Replace the condensed water container in the dryer.

Condensed water can cause health problems in people and animals.
Do not drink condensed water.

Condensed water can be reused for ironing. For this, you should pour the condensed water through a fine sieve or a coffee filter. If you want to reuse condensed water in a steam iron or humidifier, follow the manufacturer's instructions.

FragranceDos

Fragrance flacons (optional accessories) can be used to give your laundry a pleasant scent.

Tip: You can simply close the fragrance flacon if you want to dry textiles without adding fragrance.

⚠ Risk of fire and damage to health if fragrance flacons are used incorrectly.

The leaked fragrance can damage your health if it comes into contact with your body. Leaked fragrance can cause fire.

Before using a fragrance flacon, please read "Warnings and safety instructions", "Using the fragrance flacon (optional accessory)".

Removing the protective seal from the fragrance flacon

Only hold the fragrance flacon as illustrated. Do not hold it at an angle or tip it, as the fragrance will leak out of it.

- Take the fragrance flacon out of its packaging.

Do not attempt to open the fragrance flacon.

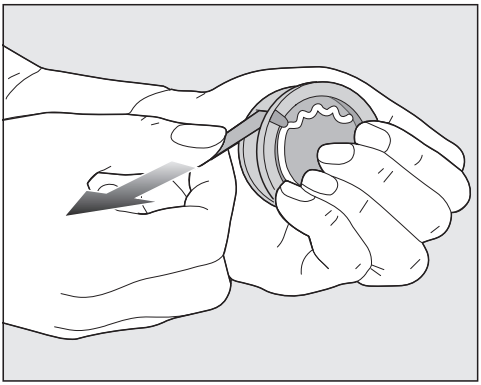

- Hold the fragrance flacon securely so that you do not open it by mistake.
- Pull off the protective seal.

Inserting a fragrance flacon

- Open the door of the tumble dryer.

The fragrance flacon is inserted in the upper fluff filter in the opening on the right hand side beside the grip.

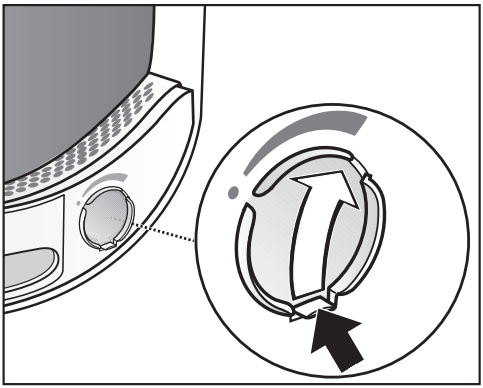

- Open the cover using the tab until the tab is at the top right hand side as shown.

Fragrance flacon

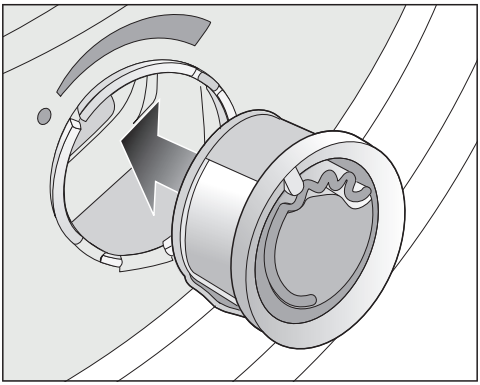

■ Insert the flacon in the opening as far as it will go.

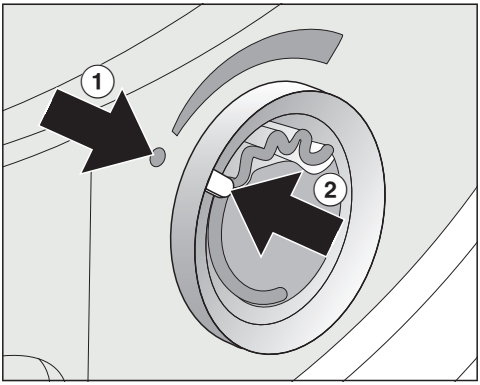

Markers ① and ② must line up with one another.

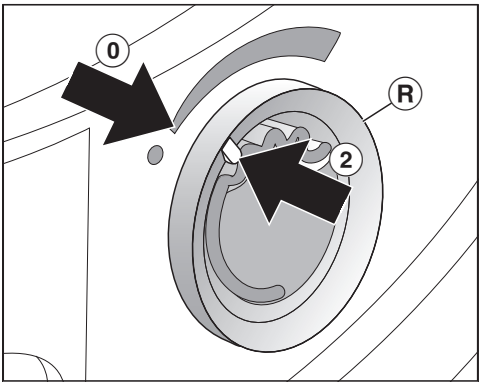

■ Turn the outer ring Ⓡ clockwise a little.

Marker ② must be in position ⓪: this is the position at which you can feel a resistance.

Opening the fragrance flacon

Before drying, you can select the intensity of the fragrance.

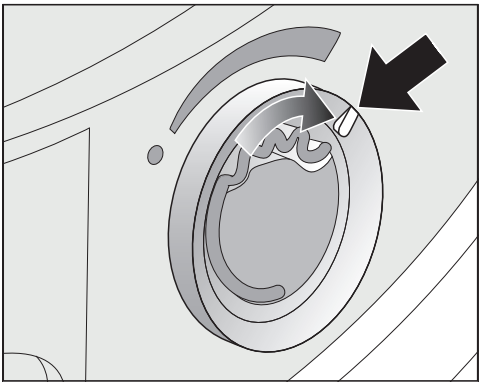

■ Turn the outer ring clockwise: the further you open the fragrance flacon, the more intense the fragrance.

Damp laundry and longer drying durations with sufficient heat transfer are needed for the fragrance to be released

into the laundry effectively. The fragrance will also be noticeable in the room air during the process.

Closing the fragrance flacon

After drying, the fragrance flacon should be closed to prevent the fragrance from escaping needlessly.

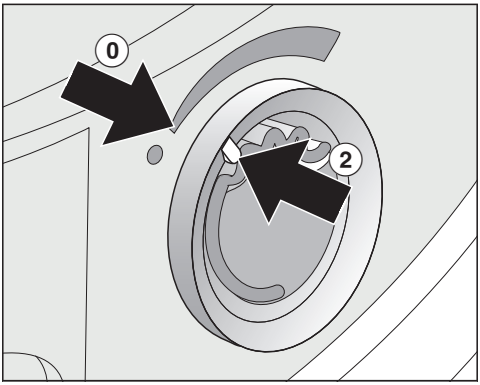

- Turn the outer ring counter-clockwise until marker ② is in position ⓪.

If you wish to dry without the fragrance occasionally: remove the fragrance flacon and store it in its original packaging.

Replace the fragrance flacon with a new one when the intensity of the fragrance is no longer sufficient.

Removing/replacing the fragrance flacon

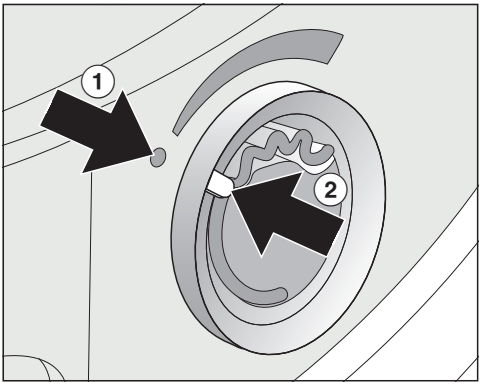

- Turn the outer ring anti-clockwise until the markers ① and ② line up.

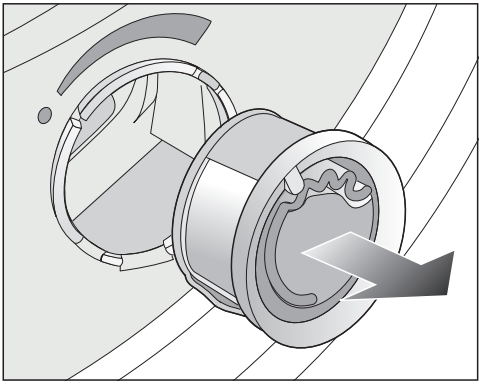

- Replace the fragrance flacon with a new one.

When not in use, you can store the fragrance flacon in its original packaging.

Replacement interval: replace the fragrance flacon when it is empty or the fragrance is no longer sufficient.

Fragrance flacons are available to order from Miele dealers, Miele Customer Service or online.

Fragrance flacon

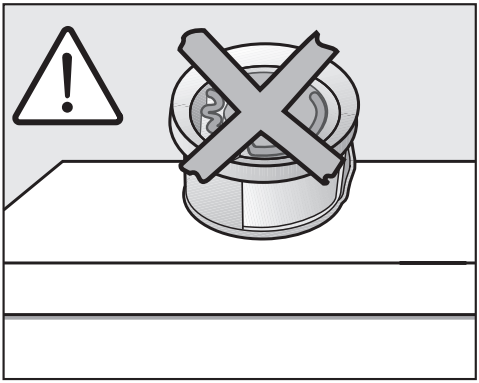

The fragrance can leak out of the flacon.
Do not lay the fragrance flacon down.

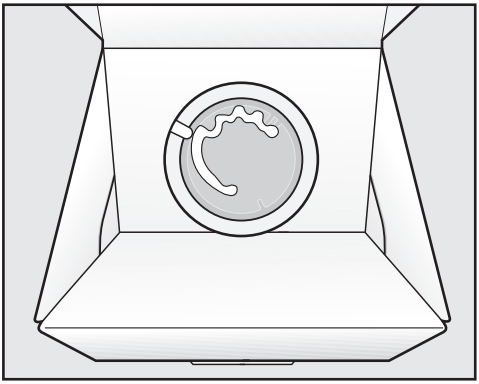

- If you are keeping the fragrance flacon in its original packaging, do not store the packaging upright on its edge or upside down. Otherwise, the fragrance will leak out.
- Always store in a cool, dry place away from direct sunlight.
- When purchasing new fragrance flacons, only remove the protective seal just before use.

Cleaning the tumble dryer

Disconnect the tumble dryer from the electrical supply.

⚠ Damage due to the use of unsuitable care products.

Unsuitable care products could damage plastic surfaces and other parts.

Do not use any solvents, abrasive cleaners, glass cleaners or all-purpose cleaners.

Cleaning recommendation: clean once or twice a year and as required.

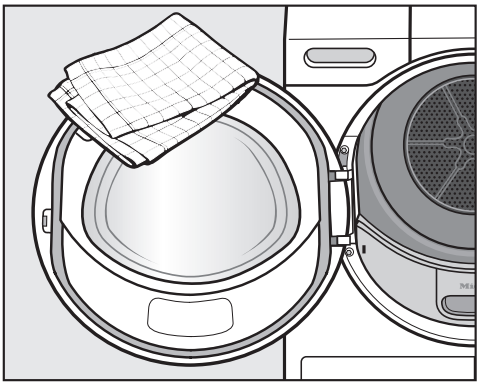

- Clean the tumble dryer and the seal on the inside of the door with a slightly damp soft cloth and a mild solution of washing-up liquid and soapy water.
- Dry all parts with a soft cloth.

Fluff filters

Environmental impact due to fluff which has been disposed of incorrectly.

To prevent microplastics from spreading into the waste water system, fluff must not be drained away with the water.

Dispose of the fluff collected by the fluff filters with your household waste.

This tumble dryer has 2 fluff filters in the loading area of the door. Both fluff filters trap fluff produced during the drying process.

Cleaning interval: clean the fluff filters after each drying programme.

Also clean the fluff filters when the ⊛ indicator light comes on.

The programme running time is extended if you do not clean the fluff filters.

The programme is aborted and a fault occurs.

- To make the indicator light go out, open and close the door while the tumble dryer is switched on.

Removing the fragrance flacon

The intensity of the fragrance will be diminished if the fluff filters and the plinth filter are not cleaned.

- Remove the fragrance flacon. See “Fragrance flacon”, “Removing/replacing the fragrance flacon”.

Removing visible fluff

Tip: You can also use a vacuum cleaner so that you can remove the fluff without touching it.

- Open the door.

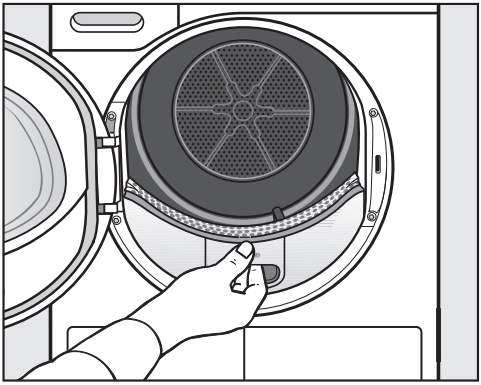

- Pull the upper fluff filter forwards to remove it.

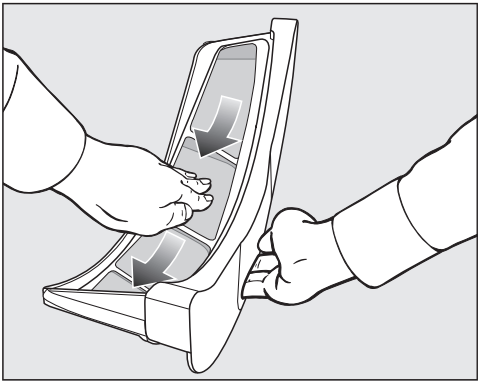

- Remove the fluff (see arrows).

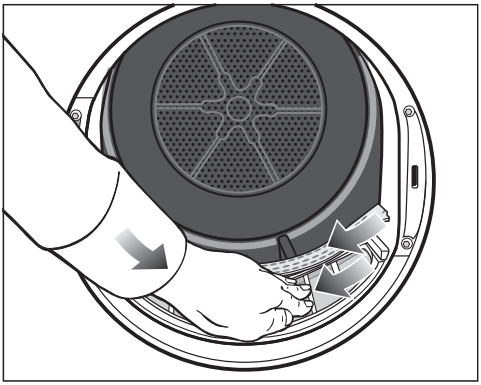

- Remove the fluff (see arrows) from the surface of all the fluff filters and the perforated laundry deflector.
- Push the upper fluff filter back into position until it clicks. Close the door.

Cleaning the fluff filters and air flow openings thoroughly

If the drying time has become longer or the surface of the fluff filters is visibly compacted with fluff, you should carry out the following cleaning procedure.

- Remove the fragrance flacon. See “Fragrance flacon”.
- Pull the upper fluff filter forwards to remove it.

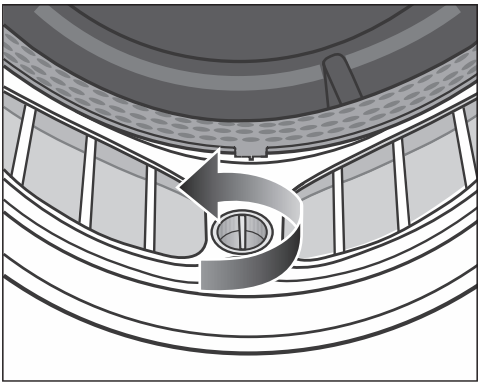

- Turn the yellow rotary control on the lower fluff filter in the direction of the arrow (until you hear it click).

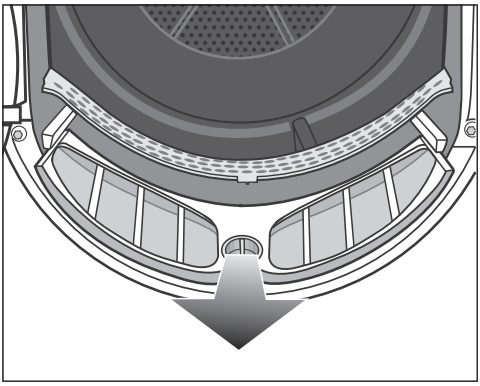

- Hold the rotary control and pull the fluff filter forwards to remove it.

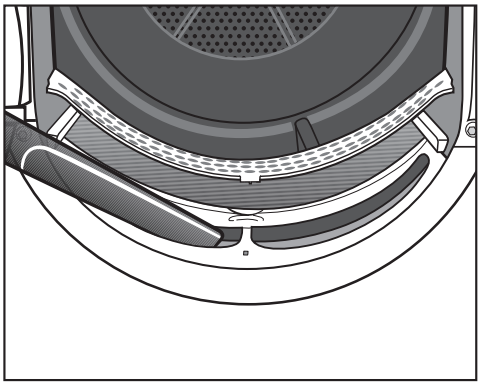

- Use a vacuum cleaner with a long crevice nozzle attached to remove any visible fluff from the upper air flow openings.

Clean all fluff filters with water.

Cleaning the fluff filters with water

- Wipe the smooth plastic surfaces of the fluff filters with a damp cloth to clean them.
- Flush the filters through under warm running water.
- Shake the fluff filters thoroughly and then dry them carefully.

Ensure the filters are dry before replacing them. Wet filters could cause operational faults.

- Push the lower fluff filter in completely and lock it with the yellow dial.
- Push the upper fluff filter in completely.
- Close the door.

Cleaning the residual moisture sensor

There is a residual moisture sensor inside the drum. The residual moisture sensor permanently measures the residual moisture in the laundry to ensure

optimum drying results. Over time, detergent residues can accumulate on the sensor, which may cause the drying results to be unsatisfactory.

Cleaning interval: clean the residual moisture sensor once or twice a year. Cleaning the sensor will ensure the best possible drying results.

- Open the door of the tumble dryer.

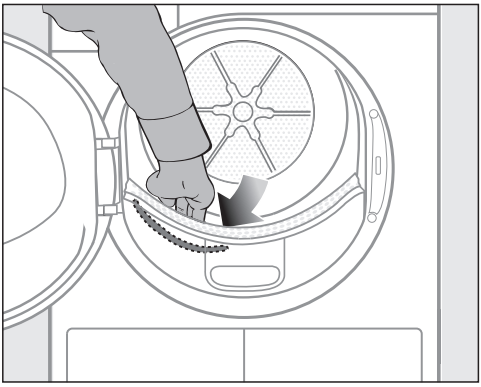

- Reach into the tumble dryer drum and behind the perforated laundry deflector with your hand.

You will feel the elongated metal residual moisture sensor on the left-hand side.

- Clean the residual moisture sensor with a damp cloth and a small amount of soapy water.
- Wipe the residual moisture sensor dry with a soft cloth.
- Close the tumble dryer door.

Cleaning the plinth filter

Environmental impact due to fluff which has been disposed of incorrectly.

To prevent microplastics from spreading into the waste water system, fluff must not be drained away with the water.

To collect the cleaning water, clean the plinth filter in a bowl or bucket.

Cleaning interval: clean the plinth filter whenever the indicator light comes on or when the programme running time seems to be taking longer than usual.

The programme running time is extended if you do not clean the fluff filters.

The programme is aborted and a fault occurs.

- To make the indicator light go out, open and close the door while the tumble dryer is switched on.

Removing the plinth filter

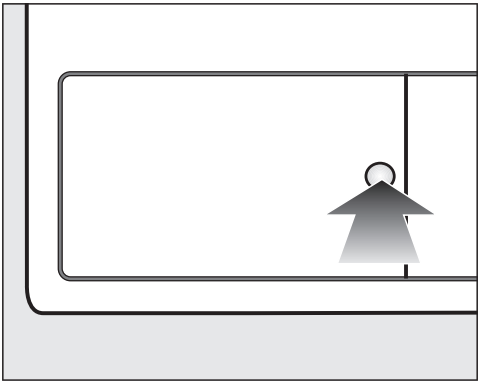

- Press the round, indented area on the heat exchanger access panel to open it.

The flap will spring open.

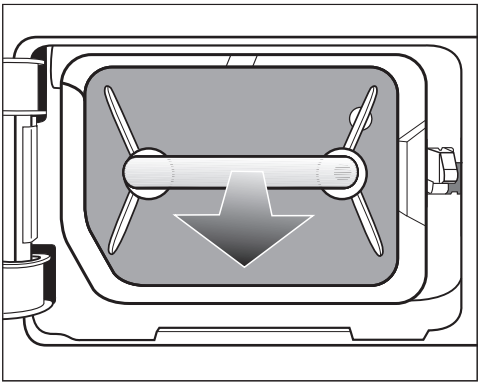

- Pull the plinth filter out by the handle.

The right-hand guide pin comes out when the plinth filter is removed. The guide pin prevents the access panel from closing without the plinth filter.

Cleaning the plinth filter

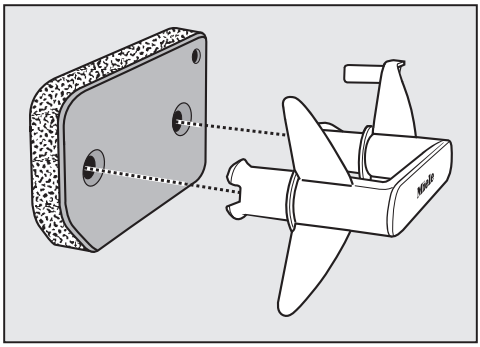

- Pull the handle out of the plinth filter.
- Clean the plinth filter carefully and thoroughly under running water.

⚠ To collect the cleaning water, place a bowl or bucket under the stopcock.

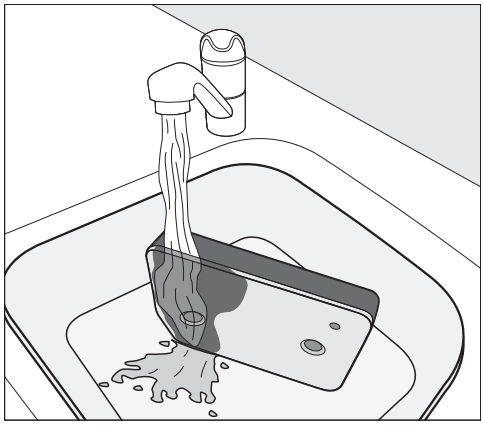

Tip: To speed up the removal of residue from the surface, run a water jet vertically over the front of the plinth filter.

- Squeeze the plinth filter very carefully several times as you rinse it.

Tip: Place the plinth filter flat in the bowl or bucket.

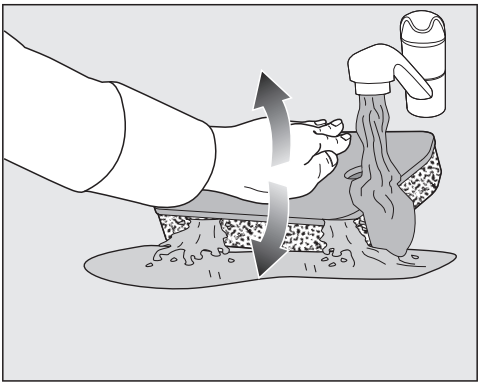

- To efficiently loosen underlying residue, gently press down on the plinth filter with the back of your hand.
- Rinse the entire plinth filter thoroughly until all visible residue has been removed.
- Carefully squeeze the plinth filter with the back of your hand until all of the water has been removed.

Tip: To soak up water, place the damp plinth filter between 2 hand towels. On an even surface, gently press down on the plinth filter with the back of your hand. This will dry the plinth filter more quickly.

The plinth filter must not be fitted dripping wet.
Otherwise, this could cause a fault.
Carefully squeeze the water out of the plinth filter.

If a drying programme is interrupted with a fault message after the clean plinth filter has been refitted, the plinth filter was too wet when it was refitted. Carefully squeeze the water out of the plinth filter again. Leave the plinth filter to air-dry.
If a fault occurs again despite this, it may be due to stubborn residue from washing substances. Reactivate the plinth filter in the washing machine. See “Problem solving guide – Reactivating the plinth filter”.

⚠ Blockages caused by a damaged or worn filter.
The heat exchanger becomes blocked and damage may occur.
Check the plinth filter following the instructions provided in “Problem solving guide – Replacing the plinth filter”. Replace the plinth filter if necessary.

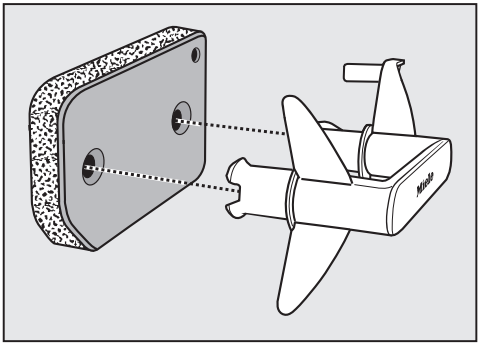

- Use a damp cloth to remove any fluff from the handle.
- Fit the plinth filter back on the handle. Make sure it is the correct way round.

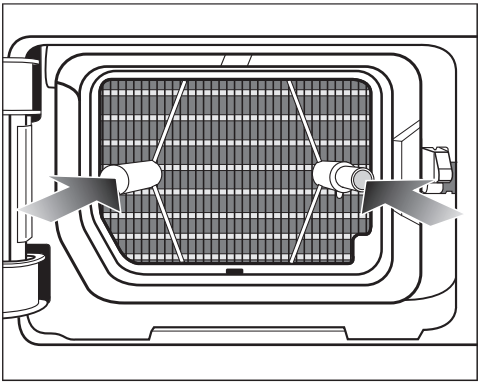

- Push the plinth filter in completely.

This will push in the right-hand guide pin at the same time.

Pouring out the cleaning water

- To catch any particles or fluff, pour the contents of the bowl or bucket through a filter (e.g. coffee filter).
- Dispose of the filter with your household waste.

Cleaning the plinth filter access panel

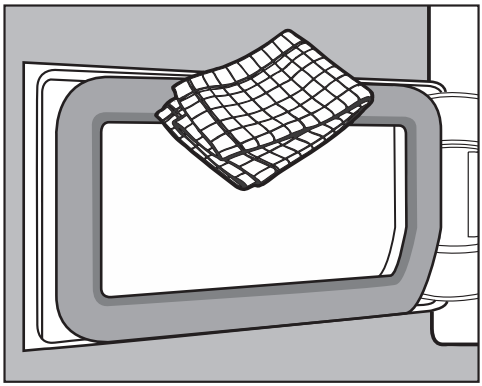

- Use a damp cloth to remove any fluff. Make sure that you do not damage the rubber seal when doing this.
- Close the heat exchanger access panel.

⚠ Damage or ineffective drying if drying takes place without a plinth filter or when the heat exchanger access panel is open.
An excessive accumulation of fluff can damage the tumble dryer. If the system is not leak-tight, this can make drying ineffective.
Only operate the tumble dryer with the plinth filter fitted and the heat exchanger access panel closed.

Troubleshooting

Many malfunctions and faults can be easily remedied. You can save time and money in many cases, as you do not need to contact Customer Service.

More information to help you remedy faults yourself can be found at www.miele.co.uk/support/customer-assistance.

Indicator lights or information on the time display triggered when a programme is cancelled

Problem	Cause and remedy
F and 066 flash, a signal sounds. The ⊛ indicator light comes on.	The system has been clogged by fluff or detergent residue. ■ To deactivate the message, turn the programme selector to the ⏻ position. ■ Clean the fluff filters and the plinth filter. – If the fluff filters and the plinth filter are damaged or out of shape, or if they cannot be cleaned, they must be replaced. – If the fault message is displayed again after cleaning, this could be due to one of the causes listed below.
	The plinth filter was too wet when it was fitted. ■ Carefully squeeze the water out of the plinth filter. ■ Leave the plinth filter to air-dry.
	There is still underlying residue in the plinth filter that could not be removed. ■ Check the plinth filter. ■ If the plinth filter is not damaged or out of shape, you can reactivate it in a washing machine.
	The heat exchanger is clogged. ■ Check the heat exchanger.
The 🜄 indicator light comes on after a programme has been cancelled and a signal sounds.	The condensed water container is full or there is kink in the drain hose. ■ To switch off the 🜄 indicator light, open and close the door (with the tumble dryer switched on). ■ Empty the condensed water container. ■ Check the drain hose.

Problem	Cause and remedy
F and another number combination flash after a programme has been cancelled, a signal sounds	No obvious cause. ■ Switch the dryer off and then on again. ■ Start a programme. If the programme is cancelled again and an error message appears, there is a fault. Contact the Miele Service Department.
0:00 lights up and the programme has been cancelled, a signal sounds	The laundry is unevenly distributed or has rolled up. ■ Disentangle the laundry and remove a few items, if necessary. ■ Switch the dryer off and then on again. ■ Start a programme.

Indicator lights or information on the time display

Problem	Cause and remedy
The ⊛ indicator light comes on at the end of the programme.	The tumble dryer is not working correctly or economically. Possible causes could be clogging caused by fluff or detergent residue. ■ To switch off the ⊛ indicator light, open and close the door (with the tumble dryer switched on). ■ Clean the fluff filters. ■ Also check the plinth filter and clean it if necessary.
	You can influence when the ⊛ indicator lights up. ■ To do this, follow the instructions in “Programmable functions.
-0- lights up	The programme selector has been moved. ■ Select the original programme. The time remaining will appear in the display again.
Bars flash in the display at the end of a programme: ⌊⌋...⌊⌋...⌊⌋...	The programme has finished but the laundry has not yet cooled down. ■ Either remove the laundry and spread it out to cool down or leave it in the tumble dryer to cool down during the cooling phase.
Lines flash and light up after switching on: _ _ _. Programme selection is not possible.	The PIN code is activated. ■ See “Programmable functions”.

Troubleshooting

Problem	Cause and remedy
UP **lit and programme start is not possible.**	An update is available for the tumble dryer. See "Programmable functions".
CEr **lights up**	This is not a fault. The tumble dryer is connected to the network.
OFF **lights up**	This is not a fault. The remote control function is switched off. See "Programmable functions".
Con **lights up**	This is not a fault. The tumble dryer is connected to the network.
noC **lights up**	This is not a fault. The tumble dryer is not connected to the network. See "Programmable functions".

Unsatisfactory drying results

Problem	Cause and remedy
The *DryCare 40* Extra is not drying the laundry sufficiently.	The room where the tumble dryer is located is too warm. This has caused the DryCare process to finish prematurely. ■ Ventilate the room thoroughly. ■ To fully dry the laundry, select *Warm air* with the *DryCare 40* Extra.
The laundry is not sufficiently dry.	The load consisted of different types of fabric. ■ Finish drying using the *Warm air* programme. ■ Select a more suitable programme next time. Useful tip: You can alter the drying levels for some programmes. See "Programmable functions", sections "*P01* Drying levels Cottons" and "*P02* Drying levels Minimum iron".
Laundry or feather filled pillows smell after drying	The laundry was washed with insufficient detergent Feathers are a natural product and this is quite normal. ■ Laundry: use sufficient detergent next time. ■ Pillows: take out of the tumble dryer and air them. ■ Use a fragrance flacon (available as an optional accessory) for your favourite fragrance.
Items made of synthetic fibres are charged with static electricity after drying	Synthetic fibres tend to attract static charge. ■ Static charge can be reduced by adding a fabric conditioner to the final rinse in the washing programme.

Problem	Cause and remedy
There is a build-up of fluff	Fluff is principally the result of friction when garments are being worn and to some extent when they are being washed. Machine drying hardly causes any fluff to form. Fluff is collected by the fluff filters and the plinth filter and can be removed easily. ■ See “Cleaning and care”.

The drying cycle duration is very long

Problem	Cause and remedy
The drying process goes on too long or even switches off.*	The room where the tumble dryer is located is too warm. ■ Ventilate the room thoroughly.
	Detergent residues, hair and fine fluff can clog the filters. ■ Clean the fluff filters and the plinth filter. ■ Remove visible fluff from the heat exchanger.
	The laundry is unevenly distributed or has rolled up. The drum is too full. ■ Disentangle the laundry and remove a few items. ■ Start a programme.
	The bottom right grille is blocked. ■ Move any objects, such as a laundry basket, away from the dryer.
	The laundry is too damp. ■ Spin using a higher spin speed in the washing machine.
	Metallic components, e.g. zips, have prevented the tumble dryer from registering the correct laundry moisture level. ■ Open any zips next time. ■ If the problem recurs, dry these items using the *Warm air/DryFresh* programme.

* Switch the tumble dryer off and on again before starting a new programme.

Other problems

Problem	Cause and remedy
There are humming noises	The compressor is operating. These noises are quite normal and do not indicate a fault.
A programme does not start	No obvious cause. ■ Connect the tumble dryer to the mains ■ Turn on the tumble dryer ■ Close the door ■ Check whether the mains fuse has tripped
	Has there been a power cut? When power is restored any previously running programme will restart automatically.
After the *DryCare 40* Extra is selected, the drying level "jumps" back to a different level.	The drying level selected previously cannot be combined with the Extra. The next possible drying level is selected automatically.
Only the *Start/Add laundry* sensor control flashes slowly when the programme is running.	Once the programme has been running for 10 minutes, the indicators go out. The *Start/Add laundry* sensor control flashes slowly. This is not a fault, but a normal function to help save energy. ■ Touch a sensor control to switch on the indicators. See "*II* Control field standby status" in "Programmable functions".
The tumble dryer is switched off.	The tumble dryer switches off automatically after 15 minutes if no further selections are made. This is not a fault, but a normal function. ■ Select a programme.
The drum lighting does not come on.	To save energy, the drum lighting goes out automatically after a set time and after the programme starts. ■ Switch the dryer off and then on again. ■ To switch the drum lighting on, open the door of the tumble dryer.
	The drum lighting is faulty. The drum lighting is designed to last a long time and should not normally need to be replaced. ■ If you have tried everything but the drum lighting still does not come on, contact the Miele Customer Service Department.

Replacing the plinth filter

The heat exchanger can clog up. Replace the plinth filter immediately if you see the following signs of wear before or after cleaning (optional accessory).

Poor fit

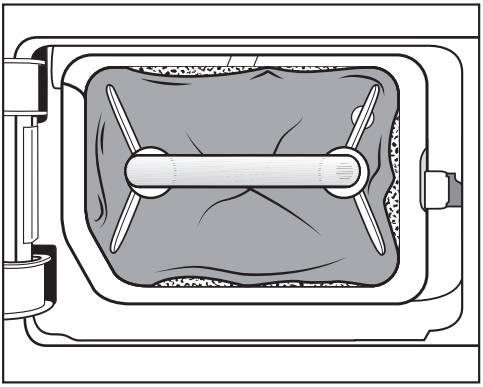

The edges of the plinth filter do not sit properly and the plinth filter is out of shape. Fluff will blow into the heat exchanger unfiltered through edges that do not sit properly. This will, in time, cause a blockage in the heat exchanger.

Deformations

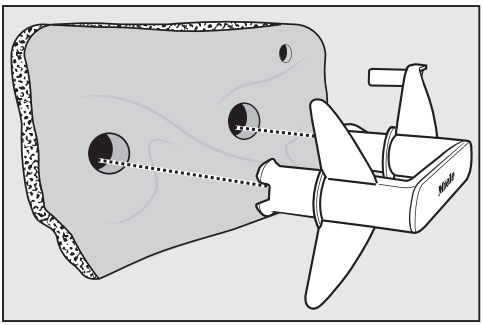

Deformations indicate that the filter has become blocked and worn by continuous use.

Cracks, tears, indentations

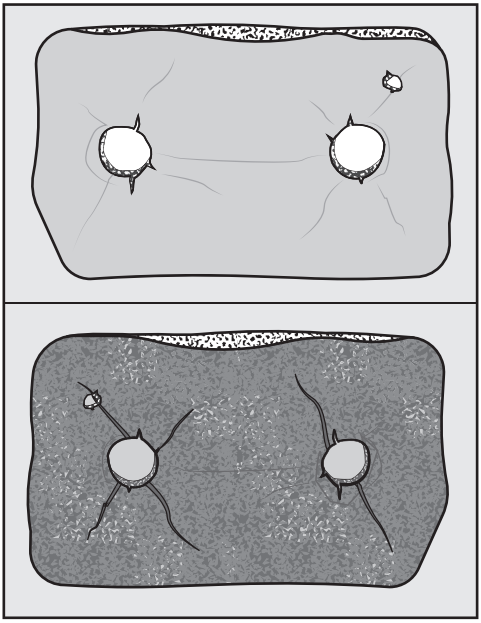

Fluff will blow into the heat exchanger through cracks and tears. This will, in time, cause a blockage in the heat exchanger.

White residues or residues of other colours

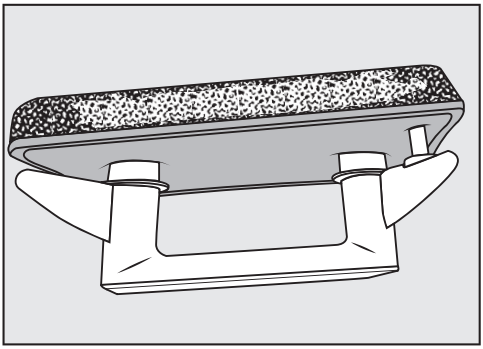

These residues arise from laundry fibres and traces of detergent components. They can be found on the front and side edges of the plinth filter. In extreme

cases, they can form stubborn crust. Residues are a sign that the plinth filter no is longer a snug fit at the sides, even if it appears to be perfect:
fluff is getting in unfiltered at the edges.

Reactivate the plinth filter. If these residues appear on the plinth filter again soon after cleaning, the plinth filter must be replaced.

Reactivating the plinth filter

You can reactivate one or more soiled plinth filters in a washing machine. You will then be able to use the plinth filter again.

Prior to reactivation, check that the plinth filter is in good order. Check the plinth filter following the instructions provided in “Problem solving guide – Replacing the plinth filter”. Replace the plinth filter if it has worn out.

- Wash the plinth filter(s) separately, not with any laundry items. Do not add any detergent.
- Select a short wash programme with a maximum temperature of 40 °C and a maximum spin speed of 600 rpm.

You can re-insert the plinth filter once the wash and spin cycles are complete.

Checking the heat exchanger

⚠ Risk of injury from sharp cooling fins.
You could cut yourself.
Do not touch the cooling fins with your hands.

- Look to see if fluff has accumulated.

Remove any fluff you can see.

⚠ Damage due to incorrect cleaning of the heat exchanger.
The tumble dryer will not dry if the cooling fins are damaged or bent.
Clean using a vacuum cleaner with a suction brush attached. Only pass the vacuum cleaner brush over the heat exchanger cooling fins lightly, without applying any pressure.

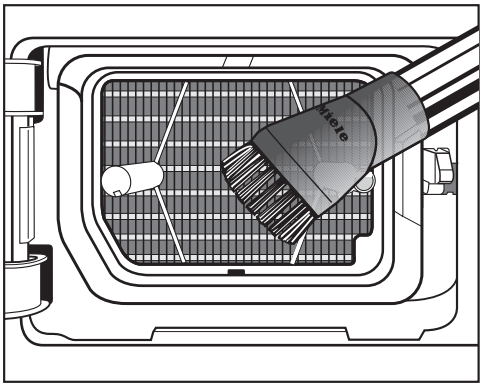

- Use a vacuum cleaner to remove fluff and residues.

Information to help you rectify faults yourself and about Miele spare parts can be found at www.miele.com/service.

Contact in the event of a fault

In the event of any faults which you cannot remedy yourself, please contact your Miele dealer or the Miele Customer Service Department.

You can book a Miele Customer Service Department call-out online at www.miele.com/service.

Contact information for the Miele Customer Service Department can be found at the end of this document.

Please quote the model identifier and serial number of your appliance (Fabr./SN/Nr.) when contacting the Miele Customer Service Department. This information can be found on the data plate.

Please note that telephone calls may be monitored and recorded for training purposes and that a call-out charge will be applied to service visits where the problem could have been resolved as described in this booklet.

The data plate is visible when the door is open.

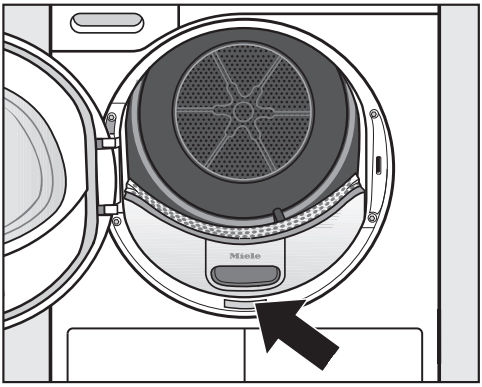

EPREL database

Information on energy labelling and ecodesign requirements is available in the European Product Database (EPREL). You can find the product database at the following link https://eprel.ec.europa.eu/. You will be asked to enter the model identifier.

The model identifier can be found on the data plate.



Warranty

For information on the appliance warranty specific to your country please contact Miele. See back cover for address.

In the UK, your appliance warranty is valid for 2 years from the date of purchase. However, you must activate your cover by calling 0330 160 6640 or registering online at www.miele.co.uk.

Optional accessories

Products specially tailored to your tumble dryer – such as fragrance flacons, dryer baskets and accessories – are available from the Miele online shop, from Miele Customer Service or from your Miele dealer.

You can access the Miele online shop via the following QR code:

Front view

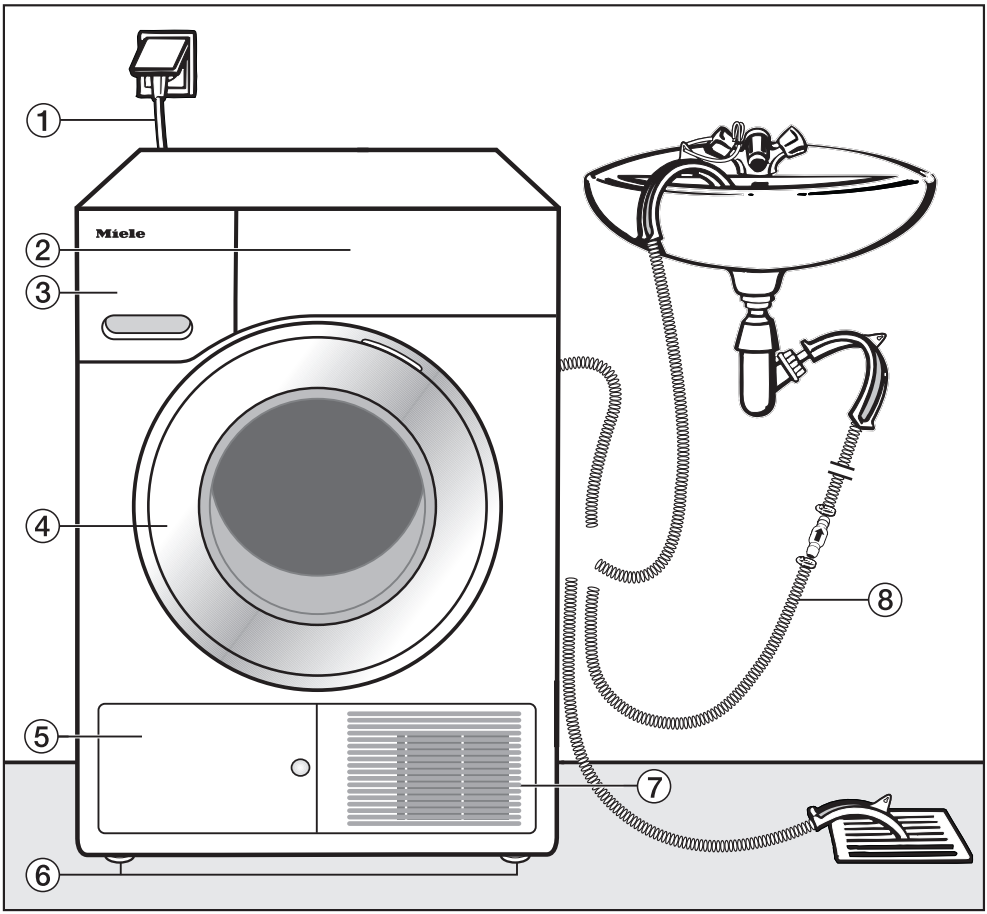

① Mains connection cable
② Control panel
③ Condensed water container
④ Door
⑤ Plinth filter flap
⑥ 4 height-adjustable feet
⑦ Cooling air grille
⑧ Drain hose for condensed water

Rear view

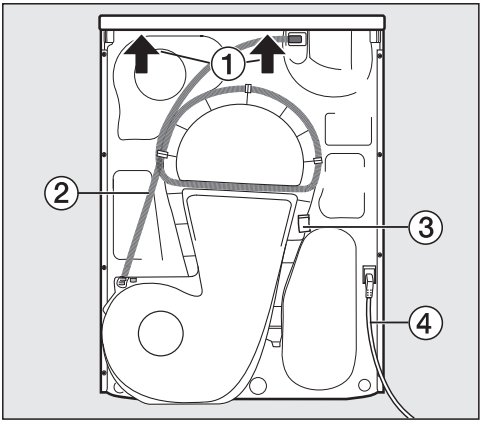

① Protruding lid for holding when moving the appliance

② Drain hose for condensed water

③ Hook for winding up the mains connection cable during transport

④ Mains connection cable

Transporting the tumble dryer

⚠ Danger of injury to people and damage to property caused by moving the appliance incorrectly.
If the tumble dryer tips up there is a danger of injury to people and damage to property.
Ensure that the tumble dryer is stable during transportation.

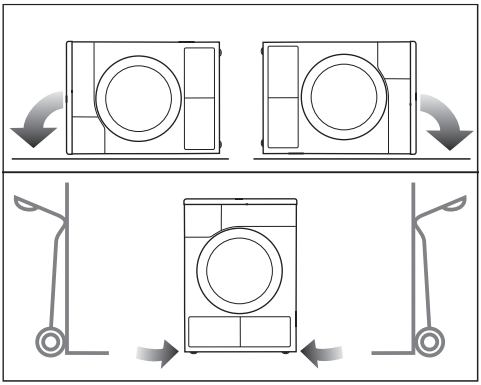

- If the tumble dryer is being transported on its side, it must be tipped onto its left or right side.
- If the tumble dryer is being transported upright and you are using a hand truck, you must transport it with its left or right side resting on the truck.

Transporting the tumble dryer to its installation site

⚠ Make sure the fixings at the back of the lid are secure.
Otherwise there is a danger of the lid being pulled off when carrying the appliance.
Before carrying the appliance check that the lid is secure where it protrudes at the back of the appliance.

- Carry the tumble dryer by the front feet and by the lid where it protrudes at the back of the appliance.

Installation

Levelling the tumble dryer

No lockable door, sliding door or door hinged in the opposite direction must be installed within the swing range of the dryer door.

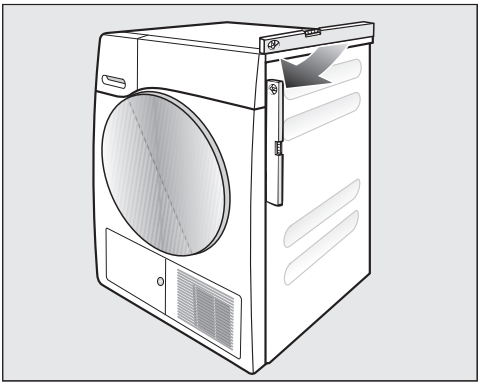

The tumble dryer must stand perfectly level to ensure safe and proper operation.

The feet on the tumble dryer can be adjusted to compensate for unevenness in the floor.

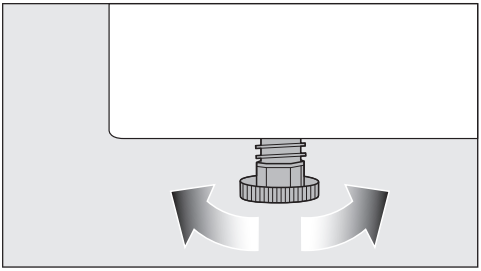

- Adjust the tumble dryer feet until the appliance is level.

Tip: Use a flat 17 mm open spanner to make it easier to turn the adjustable feet. Many Miele washing machines are supplied with a suitable open spanner.



⚠ Risk of fire and explosion due to damage to the tumble dryer.

The refrigerant is flammable and explosive.

Do not make any alterations to the tumble dryer. Take measures to protect the tumble dryer against damage.

If the tumble dryer is damaged, proceed as follows:

- Avoid naked flames or anything which creates a spark.
- Disconnect the tumble dryer from the electrical supply.
- Air the room where the tumble dryer is located.
- Contact the Miele Customer Service Department.

Downtime after installation

⚠ Damage to the tumble dryer by switching it on too soon.

This can damage the heat pump.

After setting up the tumble dryer wait for at least one hour before switching it on.

Ventilation

The cool air intake at the front of the tumble dryer must not be blocked or covered. This would hinder a sufficient intake of cool air for the heat exchanger.

Do not block the gap between the bottom of the tumble dryer and the floor with plinth facings, deep pile carpet etc. This would hinder a sufficient flow of air to the tumble dryer.

The hot air that is blown out from the heat exchanger warms the room air. Ensure sufficient ventilation of the room: e.g., open the window. The drying time will otherwise take longer (higher energy requirement).

The heat pump that is essential to the operation of this tumble dryer generates a great deal of heat inside its casing. There must be a reliable means of dissipating this heat.
Otherwise loads could take longer to dry or the tumble dryer might sustain damage in the long term.
Permanent room ventilation during every drying programme and the gap between the bottom of the tumble dryer and the floor are mandatory requirements at all times.

Before moving the tumble dryer again

A small quantity of condensed water that remains in the area around the pump after the drying process can run out if the tumble dryer is tilted. Recommendation: start a programme for approx. 1 minute before transporting the dryer. Any remaining condensed water will then be fed into the condensed water container (which you will need to empty again) or out through the drain hose.

Additional installation requirements

Slot-in

This tumble dryer is suitable for pushing under a worktop.

Appliance defect due to a build-up of heat.
Make sure there is adequate room for warm air from the dryer to be directed away.

- The appliance lid cannot be removed.
- The electrical socket must be located in an accessible position near the tumble dryer.
- Drying durations may increase slightly.

Optional accessories

– Washer-dryer stack

The tumble dryer can be combined with a Miele washing machine in a washer-dryer stack. The appropriate Miele washer-dryer stacking kit is required.

– Plinth

The tumble dryer can be fitted on a plinth with drawer (please note the plinth may not be available in all countries).

External condensed water outlet

Note

When drying is in progress, condensed water is pumped into the condensed water container through the drain hose which is located at the back of the dryer.

The condensed water can also be externally drained away via the drain hose at the back of the dryer. This means that the condensed water container no longer has to be emptied.

Drain hose length: 1.49 m
Max. delivery head: 1.00 m
Max. drain hose length: 4.00 m

Drainage accessories

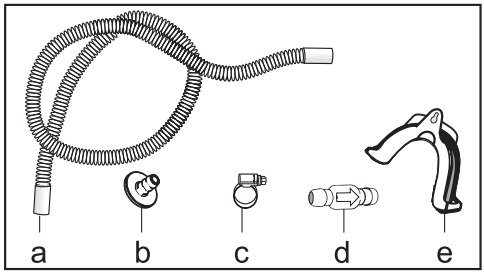

- Supplied: Adapter (b), Hose clip (c), Hose holder (e);
- Available to purchase: “Non-return valve” kit for connection to an external water connection. Non-return valve (d), Hose extension (a) and Hose clips (c) are supplied.

Installation conditions requiring a non-return valve

⚠ Danger of condensed water back-flow.
Water could flow back into the tumble dryer or be drawn into it. Back-flow water could damage the tumble dryer and also the room in which it is located.
The non-return valve should be used if the end of the hose is immersed in water, or if other water connections are installed.

Maximum delivery head with non-return valve fitted: 1.00 m

Installation conditions requiring the fitting of a non-return valve:

- Drainage into a sink or floor gully where the end of the hose is immersed in water.
- Connection to a sink drain outlet.
- Connection to a drainage system already in use by another appliance, e.g. a dishwasher or washing machine.

If the non-return valve is incorrectly fitted the appliance will not drain.
The non-return valve has to be fitted with the arrow on it pointing in the direction of flow.

Arranging the drain hose

⚠ Damage to the drain hose through incorrect handling.
The drain hose can suffer damage and leak.
Do not pull on the drain hose and do not stretch it or allow it to become kinked.

There will be a small amount of residual water left in the drain hose. Have a container ready to collect this.

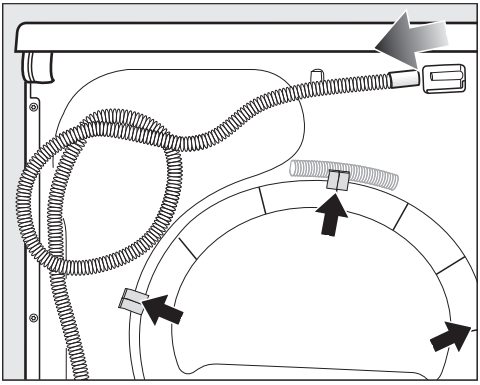

- Pull the drain hose off its connection (light arrow).
- Pull the hose out of the holders (dark arrow) and unwind it.
- Allow any residual water to run into a container.

Examples

Drainage into a sink or floor gully

Use the hose holder to secure the drain hose.

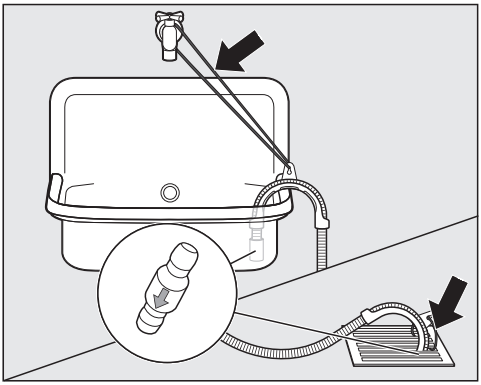

⚠ Water damage.
Should the end of the hose come loose, overflowing water can cause damage.
Secure the drain hose carefully (e.g., by tying it) to make sure it cannot slip.

The non-return valve can be fitted in the end of the hose.

Direct connection to a sink drain outlet

Use the hose holder, the adapter, the hose clips and the non-return valve (available to purchase).

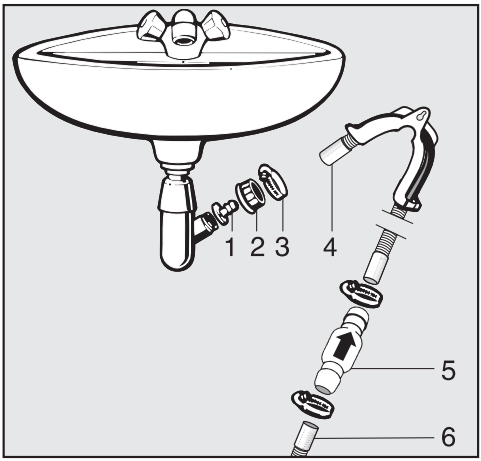

1. Adapter
2. Nut
3. Hose clip
4. End of the hose (secured with the hose holder)
5. Non-return valve
6. Tumble dryer drain hose

- Fit adapter **1** to the sink drain outlet using nut **2**.
  The nut is usually fitted with a washer which must be removed.
- Attach the end of the hose **4** to adapter **1**.
- Use the hose holder.
- Use a screwdriver to tighten hose clip **3** up close to the nut.
- Fit non-return valve **5** to tumble dryer drain hose **6**.

Non-return valve **5** has to be fitted so that the arrow points in the direction of flow (i.e. towards the sink).

- Secure the non-return valve using hose clips.

Adapter for drainage

- Connection option for washing machine and tumble dryer
- With integrated non-return valve for the tumble dryer

Use:

- For a sink drain outlet

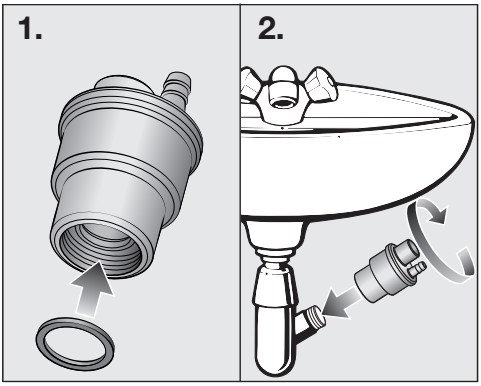

- For plastic pipe DN 40/DN 50

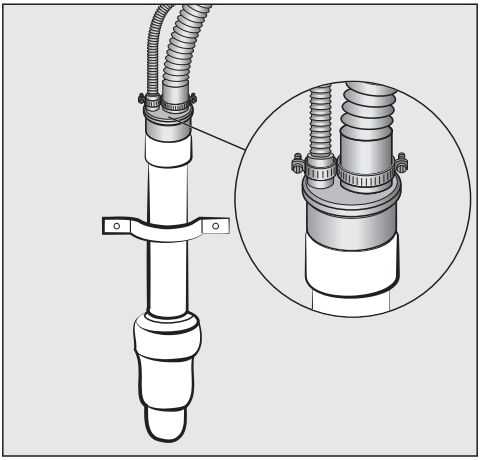

Changing the door hinging

You can change the door hinging on this tumble dryer yourself.

For safety reasons the tumble dryer must be disconnected from the electricity supply before changing the door hinging.

You will need:

- a Torx T20 and T30 screwdriver
- a flat head screwdriver or pointed pliers
- the lock catch cover supplied
- the door hinge cover supplied
- a soft surface (e.g. a tablecloth)

Changing the hinging over

1. Remove the door from the dryer

■ Open the door.

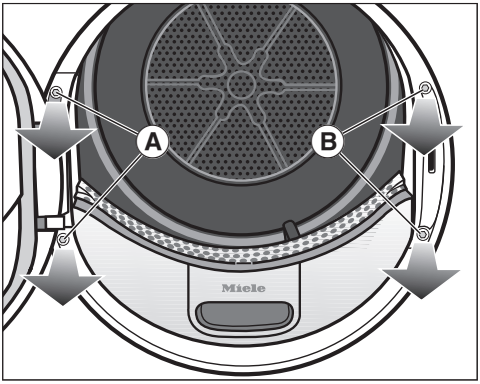

■ Use a T30 Torx screwdriver to unscrew the two screws on the base plate of the door hinge Ⓐ.

The door cannot fall off as it is held in place by 2 pins.

■ Hold the door securely and pull it forwards: to remove the door you will need to pull the base plate of the hinge with its 2 pins out of the dryer.

To avoid scratching the door, place it outer side downwards on a soft surface (e.g. a tablecloth).

2. Change over the door lock on the dryer

■ Use a Torx T30 screwdriver to unscrew the two screws on the door lock Ⓑ.

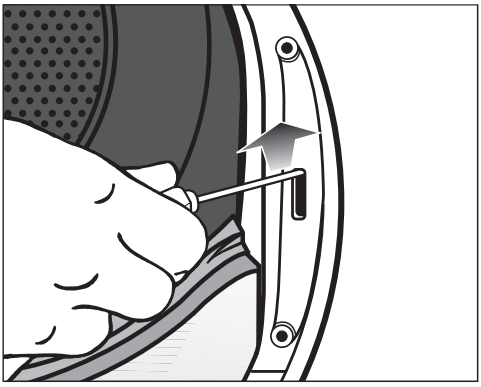

■ Use the screwdriver to press the door lock upwards.

The door lock will spring out of its position and can then be removed.

- Turn the door lock through 180°.

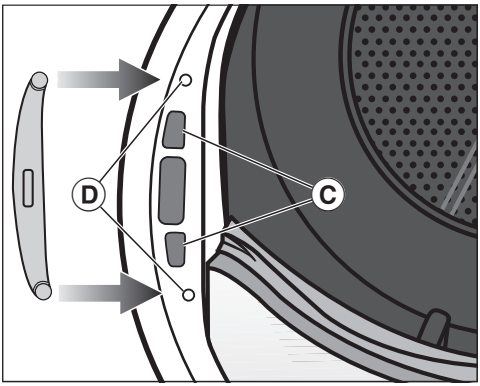

- Press the door lock into openings Ⓒ on the opposite side of the door opening.
- Adjust the position of the door lock so that the screw holes line up with those in the front panel of the dryer Ⓓ.
- Secure the door lock with the two Torx screws.

3. Remove the lock catch from the door

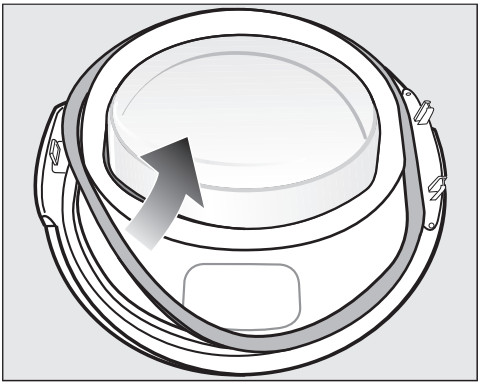

- First take the rubber seal off the door and place this to one side.

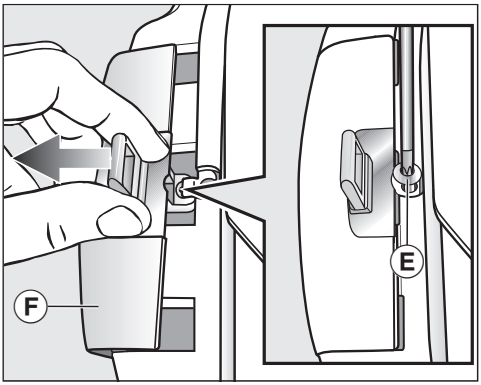

- Use a T20 Torx screwdriver to remove screw Ⓔ on the lock catch.
- Pull off the lock catch together with lock catch cover Ⓕ.

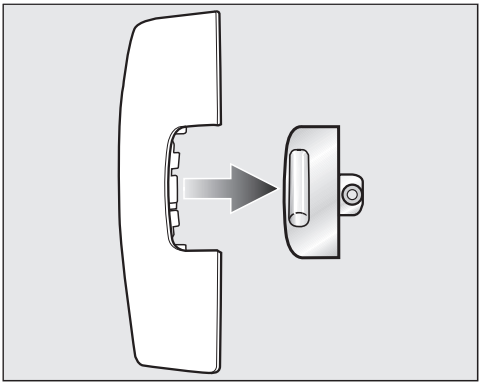

- Remove the lock catch from the cover.

This lock catch cover is no longer needed, however, please keep it in a safe place.

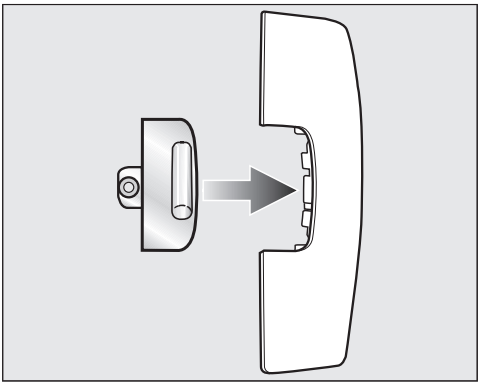

- Insert the lock catch into the new cover supplied with the dryer.
- Place this new cover to one side for now.

4. Dismantle the door hinge from the door

The door hinge cover must be unclipped from position Ⓖ and then removed.

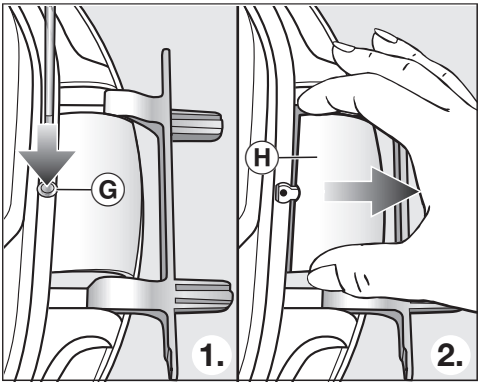

- Use a screwdriver to press down gently on position Ⓖ on the door hinge cover.
- Using a little force, pull out door hinge cover Ⓗ.

This door hinge cover is no longer needed, however, please keep it in a safe place.

5. Change over the door hinge on the door

The door hinge is secured to the door with 2 angled rods. These rods need to be removed with a screwdriver or pointed pliers.

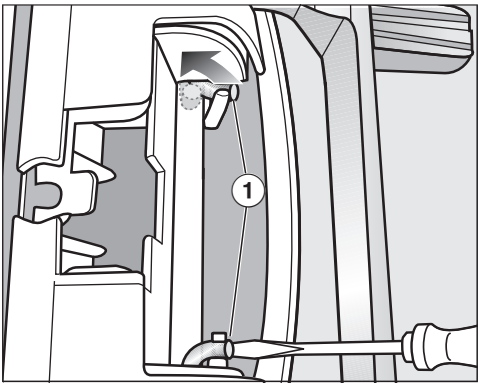

- Insert the end of the screwdriver blade under rod ① and rotate it so it is in an upright position. Do the same to the other rod.

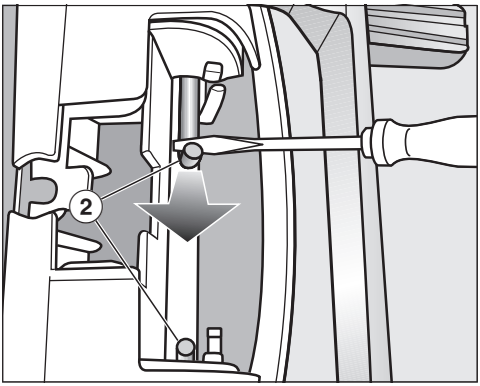

- Use the screwdriver or pointed pliers to guide first one then the other rod ② to the middle until each can be removed.

Tip: In some circumstances, the rods can be difficult to dislodge. Moving the screwdriver with a levering action while pulling at the same time may help to work the rods free.

- Remove the door hinge and turn it through 180°.
- Fit the door hinge on the opposite side of the door.

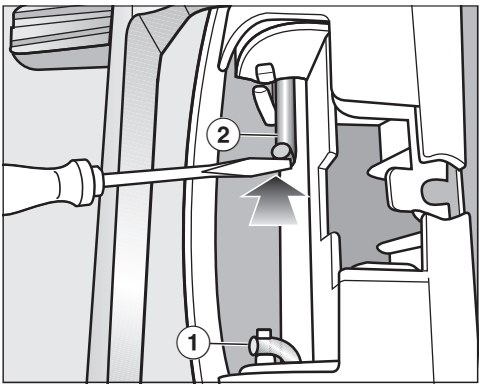

- Secure the door hinge with the two rods ②.
- Position the tip of the screwdriver under the end of the rod and then push it into its resting position ①.

You now need the new door hinge cover supplied with the tumble dryer.

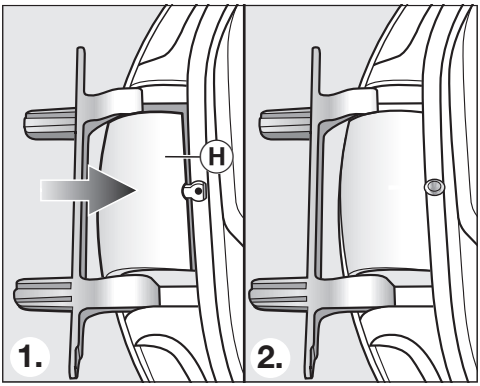

- Fit new door hinge cover Ⓗ and clip it into position.

6. Change the lock catch on the door

⚠ You now need the new lock catch cover supplied with the dryer which you have already fitted with the lock catch.

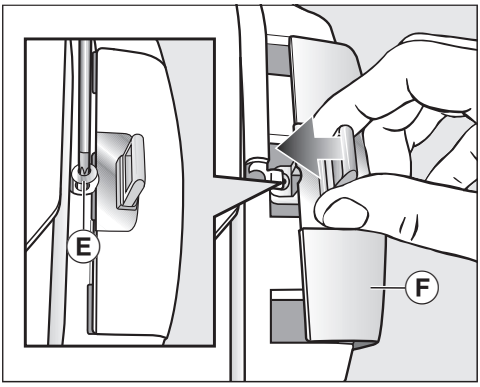

- Push lock catch cover Ⓕ with its lock catch into position.
- Tighten screw Ⓔ.

Refitting

7. Refit the door

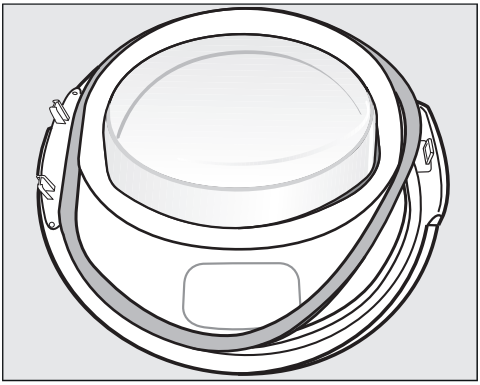

- Press the rubber seal back into the grove on the door.
- Position the door in front of the dryer.
- Fit the base of the door hinge with its 2 pins into the openings on the dryer.

The base of the door hinge must be flush with the front panel of the dryer. The door cannot fall off in this position.

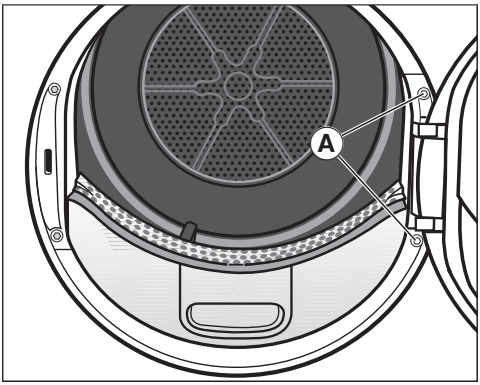

- Screw the door securely to the dryer at the base of door hinge Ⓐ.

⚠ Now that you have changed the door hinging the door will open from the opposite side.

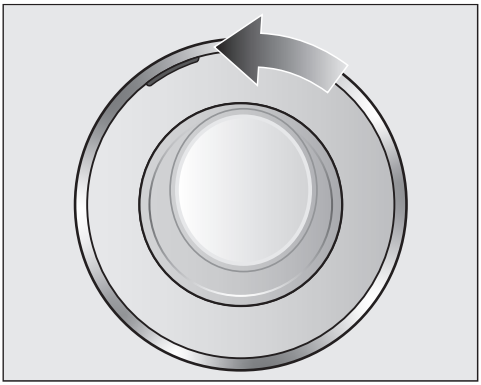

- Push the orange marker round to the other side so that you will see at which side to pull the door open.

Important

⚠ Please keep the lock catch and door hinge covers which were no longer needed in a safe place. These will be required if, for example, you move house and need to change the door hinging back to its original position.

Electrical connection

The tumble dryer is supplied with a mains cable with moulded plug ready for connection to a suitable earthed socket.

The socket must be easily accessible after the tumble dryer has been installed. If the socket is not easily accessible, ensure that a suitable means of disconnection is provided on the installation side for each pole.

⚠ Risk of fire from overheating.
Connecting the tumble dryer to a multi-socket adapter or to an extension lead can overload the mains connection cable.
For safety reasons, do not use an extension cable or multi-socket adapter.

The electrical system must comply with local and national safety regulations (BS 7671 in the UK).

For safety reasons, we recommend using a type A ⏦ residual current device (RCD) in the relevant electrical installation for connecting the tumble dryer.

If the mains connection cable is damaged, it must only be replaced with a specific mains connection cable of the same type (available from the Miele Customer Service Department). For safety reasons, such replacement may only be carried out by a qualified specialist or the Miele Customer Service Department.

These operating instructions and the data plate indicate the nominal power consumption and the appropriate fuse rating. Compare this information with the data of the on-site electrical connection.
If in any doubt, consult a qualified electrician.

Temporary or permanent operation on an autonomous power supply system or a power supply system that is not synchronised with the mains power supply (e.g. island networks, back-up systems) is possible. A prerequisite for operation is that the power supply system complies with the specifications of EN 50160 or an equivalent standard. The function and operation of the protective measures provided in the domestic electrical installation and in this Miele product must also be maintained in isolated operation or in operation that is not synchronised with the mains power supply, or these measures must be replaced by equivalent measures in the installation. As described, for example, in the current version of BS OHSAS 18001–2 ISO 45001.

Technical data

Height	850 mm
Width	596 mm
Depth	643 mm
Depth with door open	1077 mm
Suitable for pushing under a worktop	Yes
Suitable for stacking	Yes
Weight	approx. 52 kg
Drum volume	120 litres
Load size	9 kg (weight of dry laundry)
Capacity of condensed water container	4.8 l
Hose length	1.49 m
Maximum delivery head	1.00 m
Maximum drain hose length	4.00 m
Length of connection cable	2.00 m
Voltage	See data plate
Connected load	See data plate
Fuse rating	See data plate
Test certificates awarded	See data plate
Energy consumption	See “Consumption data”
LEDs	Class 1
Frequency band	2.4000 GHz – 2.4835 GHz
Maximum transmission power	< 100 mW

EU Conformity declaration

Miele hereby declares that this heat-pump tumble dryer complies with Directive 2014/53/EU.

The complete text of the EU declaration of conformity is available from one of the following internet addresses:

- Products, Download from www.miele.ie
- For service, information, operating instructions etc: go to https://miele.ie.manuals and enter the name of the product or the serial number

UK Conformity declaration

Miele hereby declares that this heat-pump tumble dryer complies with UK Radio Equipment Regulations 2017, as amended.

The complete text of the UK declaration of conformity is available from one of the following internet addresses:

- Products, Download from www.miele.co.uk
- For service, information, operating instructions etc: go to https://miele.co.uk/manuals and enter the name of the product or the serial number

This **Statement of Compliance** confirms this Miele product fully complies with the **Product Security and Telecommunications Infrastructure (Security Requirements for Relevant Connectable Products) Regulations 2023.**

1) Household Appliance – *Tumble Dryer HT28-W, HT30-W*
2) Manufactured by: Miele & Cie KG,
   Carl Miele Street 29, 33332 Gutersloh Germany
   Imported by and contact point: Miele Company Ltd, Fairacres, Marcham Road, Abingdon, Oxon, OX14 ITW Great Britain
3) The defined support period at the time of first supply is 10 years
4) To report vulnerabilities and cybersecurity issues please contact: psirt@miele.com
5) Signature 
   Name: **Paul Wright**
   Company Position: **Head of Technical Management**
   Date of signature: **19th March 2024**
   Place of signature: **Abingdon, Oxfordshire**

Consumption data

Programmes	Load size[2] kg	Running time h:min	Energy kWh	Final moisture content after drying %
ECO[1]	9,0	3:07	1,60	0
	4,5	1:55	0,90	0
Cottons	9,0	3:42	1,89	- 4
Extra dry	4,5	2:16	1,08	- 4
Cottons	9,0	2:24	1,15	12
Hand iron	4,5	1:36	0,69	12
Minimum iron **Cupboard Dry**	4,0	1:12	0,46	2
Minimum iron **Hand iron**	4,0	0:58	0,35	12
Delicates **Cupboard Dry**	2,5	1:15	0,45	0

[1] ECO is the test programme in accordance with Regulations (EU) 2023/2533 and (EU) 2023/2534 for the energy label measured in accordance with EN 61121. The sound power level at full load for the ECO test programme is 64 dB(A) re 1 pW.

[2] The load refers to the weight of the dry laundry.

The values quoted for other programmes without the ECO programme are guide values calculated using EN 61121.

Consumption data can vary from the nominal values given above depending on load size, types of textiles, residual moisture levels after spinning, additional programme parameters selected and fluctuations in the electricity supply, or when water hardness levels differ from specified values.

Programming

You can use the programmable functions to alter the dryer's electronics to suit your requirements.

Programming is carried out by following these steps (❶, ❷, ❸ ... ❾) using the sensor controls.

Accessing the programming level

Before starting

- Make sure that the programme selector is turned to any of the programme settings.
- Make sure that the door of the tumble dryer is open.

❶ Touch the *Start/Add laundry* sensor control and hold it down whilst carrying out steps ❷–❸.

❷ Close the tumble dryer door.

❸ Wait until the *Start/Add laundry* sensor control, which will now be flashing quickly, lights up constantly ...

❹ ... and then release the *Start/Add laundry* sensor control.

P01 will light up in the time display.

Choosing and selecting a programmable function

The number of the programmable function will appear in the time display as *P* and a number:
e.g. *P01*.

❺ Touch the > or < sensor control to scroll to the next or previous programmable function:

Programmable function	
P00	Factory default
P01	Cottons drying levels
P02	Minimum iron drying levels
P04	Cooling down temperature
P05	Buzzer volume
P06	Keypad tone
P07	PIN code
P08	Conductivity
P11	Control field switch-off behaviour
P13	Memory
P14	Anti-crease
P19	Buzzer active
P20	Airways indicator
P22	Backlight brightness dimmed
P25	Duration of programme end buzzer
P26	Welcome tone
P90	Operating hours

P24*	RemoteUpdate
P32*	SmartGrid
P31*	Remote control

* only visible after networking

❻ Confirm the selected programmable function by touching the *Start/Add laundry* sensor control.

Editing and saving a programmable function

You can either switch a programmable function on/off or select different options.

The programmable function option will appear in the time display as - and a number:
e.g. -00.

❼ Touch the > or < sensor control to switch the programmable function on/off or to select an option:

Programmable function	Available options							
	-00	-01	-02	-03	-04	-05	-06	-07
P00	●	●						
P01		●	●	●	●	●	●	●
P02		●	●	●	●	●	●	●
P04		●	●	●	●	● to -16		
P05		●	●					
P06	●	●	●					
P07	●	●						
P08		●	●					
P11	●	●						
P13	●	●						
P14	●	●	●					
P19	●	●						
P20	●	●	●	●				
P22		●	●	●	●	●	●	●
P24	●	●						
P25		●	●					
P26	●	●	●					
P31	●	●						
P32	●	●						

● = can be selected

❽ Confirm the chosen selection with the *Start/Add laundry* sensor control.

The number of the programmable function (e.g. P01) will then light up again.

Exiting programming level

❾ Turn the programme selector to the ⏻ position.

The settings you have selected are now stored in the memory. You can alter the settings again at any time.

P00 Factory default

The programmable functions are reset to the factory default settings.

-00 = The factory default is set

-01 = Reset the programmable functions to the factory default settings

P01 Cottons drying levels

You can adjust the drying levels for the *Cottons* programme to one of 7 different levels.

-01 = Even damper
-02 = Damper
-03 = A little damper
-04 = Normal
-05 = A little drier
-06 = Drier
-07 = Even drier

P02 Minimum iron drying levels

You can adjust the drying levels for the *Minimum iron* programme to one of 7 different levels.

-01 = Even damper
-02 = Damper
-03 = A little damper
-04 = Normal
-05 = A little drier
-06 = Drier
-07 = Even drier

P04 Cooling down temperature

The laundry will be cooled to 55 °C before the end of the programme. It can be cooled to a lower temperature, but this will prolong the cooling phase.

The value is set in increments of 1 °C.

-16 = 55 °C
-15 = 54 °C
-14 = 53 °C
-13 = 52 °C
-12 = 51 °C
-11 = 50 °C
-10 = 49 °C
-09 = 48 °C
-08 = 47 °C
-07 = 46 °C
-06 = 45 °C
-05 = 44 °C
-04 = 43 °C
-03 = 42 °C
-02 = 41 °C
-01 = 40 °C

P05 Buzzer volume

The buzzer volume can be changed.

-01 = Quieter
-02 = Louder

P06 Keypad tone

The buzzer that sounds when a sensor control is pressed can be changed or switched off.

-00 = Off
-01 = Quieter
-02 = Louder

P07 PIN code

The PIN code prevents your tumble dryer being used without your knowledge.

When the PIN code has been activated, you have to enter the PIN code after switching the tumble dryer on. Otherwise, it cannot be operated.

-00 = Off

-01 = On

If the -01 option has been selected, after switching on you will have to enter the PIN code before you can operate the tumble dryer.

Using the tumble dryer when the PIN code is activated

After the tumble dryer is switched on, --- will flash in the time display.

The PIN code is 250; it cannot be altered.

- Touch the > sensor control until a 2-- flashes in the first position.
- Confirm with the *Start/Add laundry* sensor control.
- Enter the two other numbers in the same way.

The tumble dryer is ready for use after 250 has been entered and confirmed.

P08 Conductivity

This programmable function must only be set if the residual moisture reading in your laundry is incorrect due to extremely soft water.

-01 = Off

-02 = Low

Condition

This programmable function should only be set if the water used for washing the laundry is extremely soft with a conductivity reading (electrical conductivity) of less than 150 µS/cm. Contact your local water authority for the conductivity level of your drinking water.

Make sure that you only activate -02 for the condition described above. Otherwise, the drying result can be unsatisfactory.

P11 Control field switch-off behaviour

To save energy, the time display and sensor controls will go out after 10 minutes, and only the *Start/Add laundry* sensor control will flash slowly.

-00 = Off

The time display and sensor controls do not go out.

-01 = On

The time display and sensor controls will go out after 10 minutes if a programme has started.

P13 Memory

You can set the memory so that the electronic module saves the selected drying programme along with the required drying level or a specific option. It will also save the duration for the *Warm air/DryFresh* programme. The next time the programme is selected, these saved settings will appear in the display.

Options

-00 = Off

-01 = On

P14 Anti-crease

After the programme has finished, the drum will continue to rotate in a special Anti-crease rhythm for a max. of 2 hours. This helps prevent creasing if the laundry is not removed immediately after the end of the programme. The duration can be shortened.

-00 = No Anti-crease
-01 = 1 hour
-02 = 2 hours

P19 Buzzer active

The buzzer sounds to let you know that it is the end of the programme. It can be switched on or off.

The continuous tone which sounds when there are fault messages is independent of the buzzer.

-00 = Off
-01 = On

P20 Airways indicator

Fluff should be removed after drying. The ⊛ indicator light will also come on when there is a certain build-up of fluff in the filters. You can decide at what level of build-up of fluff this reminder should be given.

You will have an idea of which option you should pick after a few drying programmes.

-00 = off
The ⊛ indicator light does not come on. However, if there is a very severe blockage in the ducting, the programme will be cancelled and the fault message F 066 will appear in the display regardless of this option.

-01 = heavy
The ⊛ indicator light will come on when there is a heavy build-up of fluff.

-02 = Normal

-03 = light
The ⊛ indicator light will come on when there is only a small build-up of fluff.

P22 Backlight brightness dimmed

The brightness of the dimmed sensor controls in the control field can be set to one of 7 different levels.

The brightness changes as soon as you select a different setting.

-01 = Darkest level
...
-07 = Brightest level

P25 Duration of programme end buzzer

The buzzer sounds to let you know that it is the end of the programme. You can decide how long the buzzer should sound for.

-01 = The buzzer sounds 3 times at the end of the programme.

-02 = The buzzer sounds until the appliance switches off automatically (max. 1 hour).

P26 Welcome tone

You can decide whether or not a welcome tone is played when the appliance is switched on.

-00 = Off

-01 = On

-02 = on, slightly louder

P90 Operating hours

You can read off how many hours the tumble dryer has been in operation for.

The total running time is shown on the time display in single digits. For example, if the tumble dryer has been in operation for 1234 hours, the time display will show an *H* followed by a *1*, then a *2* and after this a *3* and a *4*. The letter *H* is displayed again after this.

Networking

The *P24*, *P31* and *P32* programmable functions are only displayed if the requirements for using Miele@home have been met (see "Miele@home" and "Before using for the first time").

Switching off WiFi

The network configuration should be reset whenever a tumble dryer is being disposed of or sold, or if a used tumble dryer is being put into operation. This is the only way to ensure that all personal data has been removed and the previous owner will no longer be able to access the tumble dryer.

■ Turn the programme selector to *MobileStart* [9].

Con will light up on the time display of the tumble dryer.

■ Touch the ◇ sensor control on the tumble dryer and hold the ◇ sensor control until the countdown on the time display has finished.

--- appears on the time display.

- The WiFi is switched off.
- The WiFi connection will be reset to the factory default setting.

  A new connection setup has to be carried out in order to use Miele@home again.

P24 RemoteUpdate

The RemoteUpdate function is used for updating the software in your tumble dryer. If an update is available for your tumble dryer, it will automatically download it. Updates will not be installed automatically. They must be initiated manually.

If you do not install an update, you can continue to use your tumble dryer in the usual way. However, Miele recommends installing updates.

Running RemoteUpdate

Information about the content and scope of an update will be provided in the Miele app.

The message *UP* will appear on the time display if an update is available.

You can install the update immediately or postpone this until later. When the tumble dryer is switched on again, you will be reminded about the update.

Deactivate RemoteUpdate if you do not want to install any updates.

The update may take several minutes.

Please note the following information about the RemoteUpdate function:

- You will only receive a message when an update is available.
- Once an update has been installed, it cannot be undone.
- Do not switch off the tumble dryer during an update. Otherwise, the update will be aborted and will not be installed.
- Some software updates can only be carried out by the Miele Customer Service Department.

On/Off

The RemoteUpdate function is activated as standard. Available updates will be downloaded automatically but will only be installed if you initiate installation manually. Deactivate RemoteUpdate if you do not want any updates to be downloaded automatically.

Options

-00 = Off

-01 = On

Starting the update

After the tumble dryer is switched on, *UP* appears on the time display.

■ Touch the *Start/Add laundry* sensor control.

UP starts to flash on the time display. The update starts.

Bars on the time display show the progress of the update:
I = 0 %
IIIIII = 100 %

Postponing the update

After the tumble dryer is switched on, *UP* appears on the time display.

■ Touch the ⏱ sensor control.

The next time you switch on the appliance, you will be prompted to start the update again.

P31 Remote control

You can use the Miele app to check the status of your tumble dryer from anywhere and start it remotely. You can also control it remotely via the *MobileStart* programme.

Remote control is automatically activated when you connect the tumble dryer to the WiFi network. You can switch off remote control if you do not want to operate the tumble dryer with your mobile device.

A programme can be cancelled via the app even if this programmable function is switched off.

Use the ⏱ button to set a timeframe during which you wish to start the tumble dryer and start the Delay start. The tumble dryer will then start within the timeframe specified when it receives your signal.

If it has not received a start signal by the latest start time set, the tumble dryer will start automatically.

Options

-00 = Off

-01 = On

P32 SmartGrid

You can use this function to set your tumble dryer to start automatically based on an external signal within a certain time period.

If you have activated SmartGrid, the ◈ sensor control will have the new "SmartStart" function rather than the "Delay start" function.

Use the ◈ sensor control to set a SmartStart time period. The tumble dryer will then start within the time period specified by you when it receives an external signal. If a signal has not been received by the latest start time set, the tumble dryer will start automatically (see "Delay start").

Options

-00 = Off

-01 = On

Copyrights and licences for the communication module

For the purpose of operating and controlling the communication module, Miele uses proprietary or third-party software that is not covered by open source licensing terms. These items of software/software components are protected by copyright. The copyrights held by Miele and third parties must be respected.

Furthermore, this communication module contains software components which are distributed under open source licence conditions. The open source components contained in the appliance along with the corresponding copyright notices, copies of the licensing terms valid at the time, and any further information can be accessed locally via IP using a web browser *(http://<IP address>/Licenses)*. The liability and warranty arrangements for the open source licences displayed in this location only apply in relation to the respective rights holders.

United Kingdom
Miele Co. Ltd., Fairacres, Marcham Road, Abingdon, Oxon, OX14 1TW
Tel: 0330 160 6600, Internet: www.miele.co.uk, E-mail: info@miele.co.uk

Australia
Miele Australia Pty. Ltd.
ACN 005 635 398
ABN 96 005 635 398
Level 4, 141 Camberwell Road
Hawthorn East, VIC 3123
Tel: 1300 464 353
E-mail: info@miele.com.au
Internet: www.miele.com.au

China Mainland
Miele Electrical Appliances Co. Ltd.
No. 82, Shimenyi Road, JingAn District
Shanghai, China, P.R.C
Post Code: 200040
Phone: +86 21 6157 3500
Fax: +86 21 6157 3511
E-mail: info@miele.cn
Internet: www.miele.cn

Hong Kong, China
Miele (Hong Kong) Ltd.
41/F - 4101, Manhattan Place
23 Wang Tai Road
Kowloon Bay, Hong Kong
Tel: (852) 2610 1025
Fax: (852) 3579 1404
E-mail:
customerservices@miele.com.hk
Website: www.miele.hk

India
Miele India Pvt. Ltd.
1st Floor, Copia Corporate Suites,
Commercial Plot 9, Mathura Road,
Jasola, New Delhi - 110025
E-mail: customercare@miele.in
Website: www.miele.in

Ireland
Miele Ireland Ltd.
2024 Bianconi Avenue
Citywest Business Campus
Dublin 24
Tel: (01) 461 07 10
Fax: (01) 461 07 97
E-mail: info@miele.ie
Internet: www.miele.ie

Malaysia
Miele Sdn Bhd
Suite 12-2, Level 12
Menara Sapura Kencana
Petroleum
Solaris Dutamas No. 1
Jalan Dutamas 1
50480 Kuala Lumpur, Malaysia
Phone: +603-6209-0288
Fax: +603-6205-3768

New Zealand
Miele New Zealand Limited
IRD 98 463 631
8 College Hill
Freemans Bay, Auckland 1011
Tel: 0800 464 353
E-mail: customercare@miele.co.nz
Internet: www.miele.co.nz

Singapore
Miele Pte. Ltd.
29 Media Circle
#11-04 ALICE@Mediapolis
Singapore 138565
Tel: +65 6735 1191
Fax: +65 6735 1161
E-mail: info@miele.com.sg
Internet: www.miele.sg

South Africa
Miele (Pty) Ltd.
63 Peter Place, Bryanston 2194
P.O. Box 69434, Bryanston 2021
Tel: (011) 875 9000
Fax: (011) 875 9035
E-mail: info@miele.co.za
Internet: www.miele.co.za

Thailand
Miele Appliances Ltd.
BHIRAJ TOWER at EmQuartier
43rd Floor Unit 4301-4303
689 Sukhumvit Road
North Klongton Sub-District
Vadhana District
Bangkok 10110, Thailand

United Arab Emirates
Miele Appliances Ltd.
Showroom 1, Eiffel 1 Building
Sheikh Zayed Road, Umm Al Sheif
P.O. Box 114782 - Dubai
Tel. +971 4 3044 999
Fax. +971 4 3418 852
800-MIELE (64353)
E-mail: info@miele.ae
Website: www.miele.ae

Manufacturer: Miele & Cie. KG, Carl-Miele-Straße 29, 33332 Gütersloh, Germany

Miele

TSD 643 WP

en-GB

M.-Nr. 13 148 470 / 00 / 002